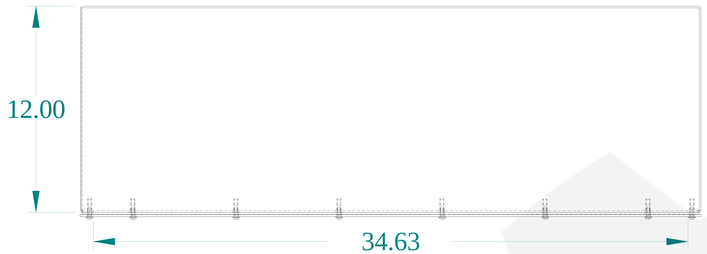

TOP VIEW

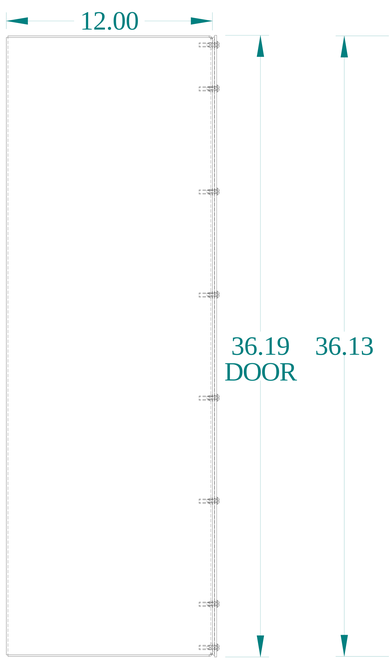

SIDE VIEW

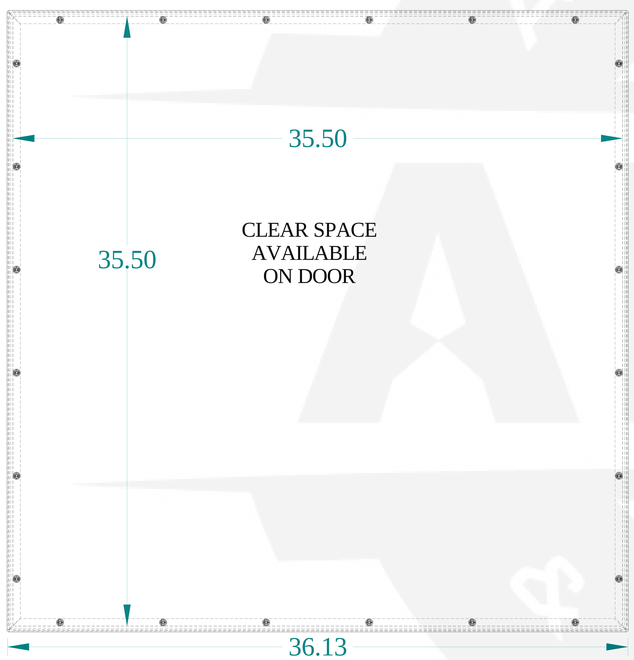

FRONT VIEW

SIDE VIEW

BACK VIEW

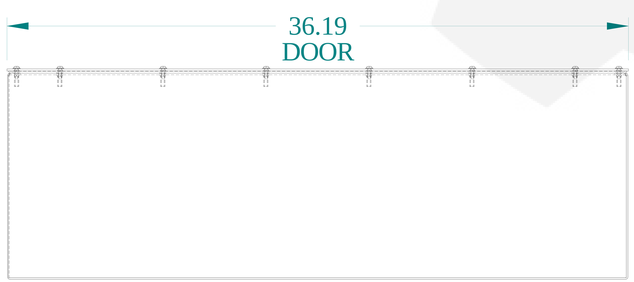

BOTTOM VIEW

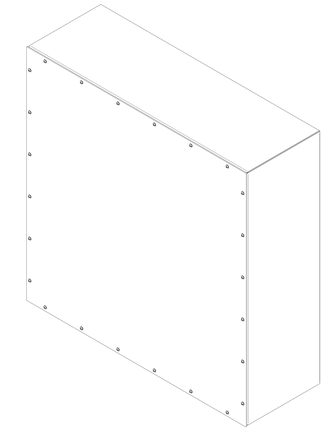

ISOMETRIC VIEW

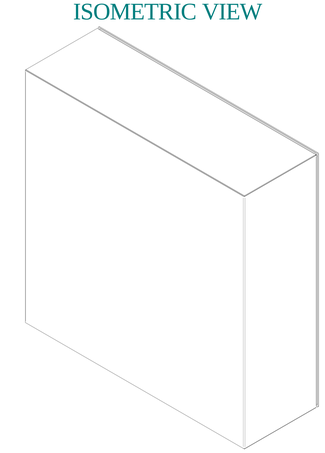

HAMMOND MANUFACTURING®

www.hammondmfg.com

Data subject to change without notice.

Part # : C4XSC363612SS	Date : Mar. 4, 2022

Link:www.hammfg.com/C4XSC363612SS