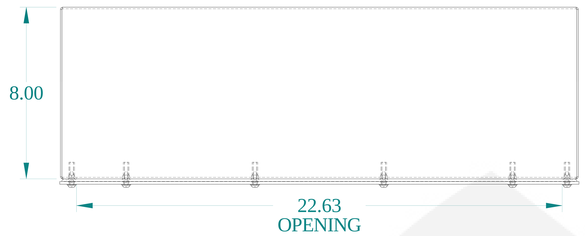

TOP VIEW

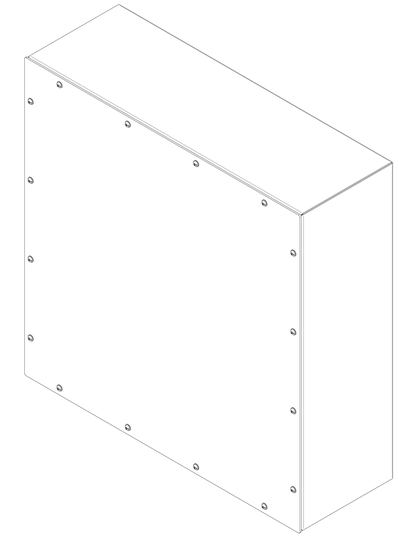

ISOMETRIC VIEW

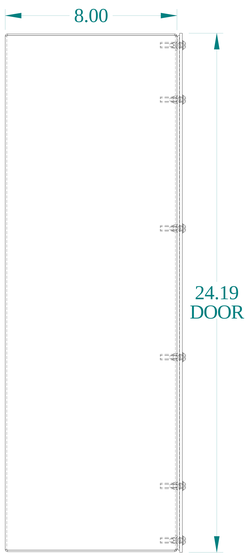

SIDE VIEW

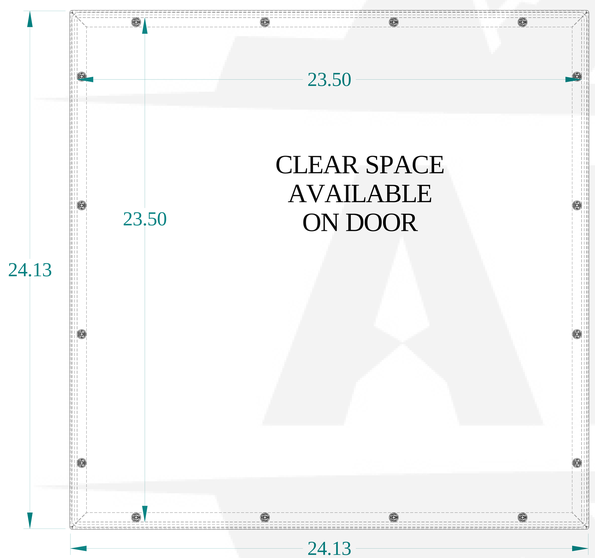

FRONT VIEW

SIDE VIEW

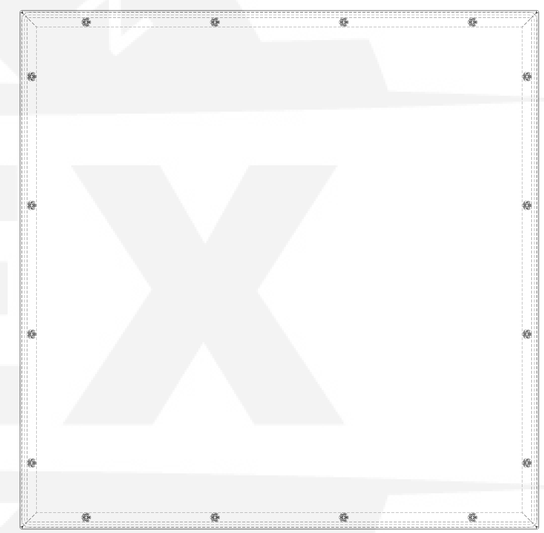

BACK VIEW

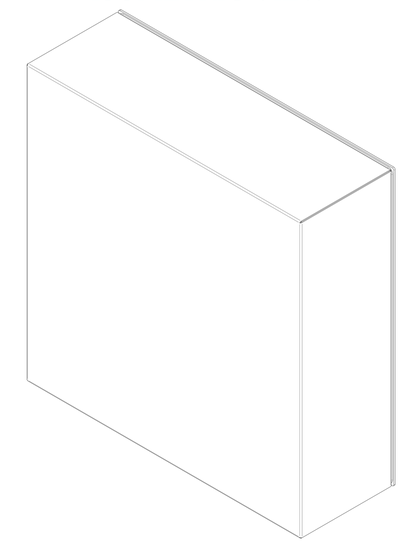

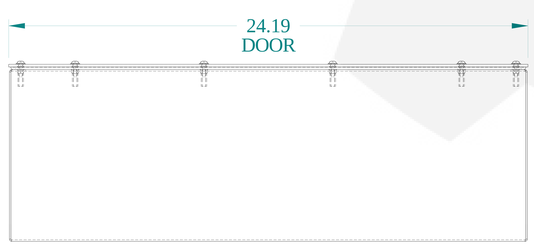

BOTTOM VIEW

HAMMOND MANUFACTURING®

www.hammondmfg.com

Data subject to change without notice.

Part # : C4XSC24248SS	Date : Mar. 4, 2022

Link:www.hammfg.com/C4XSC24248SS