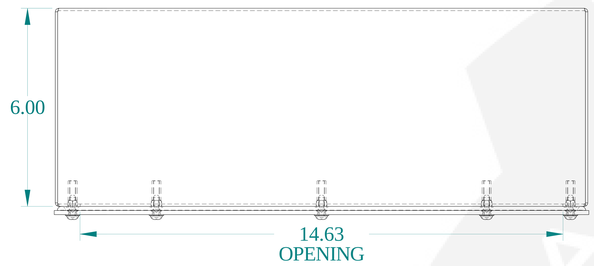

SIDE VIEW

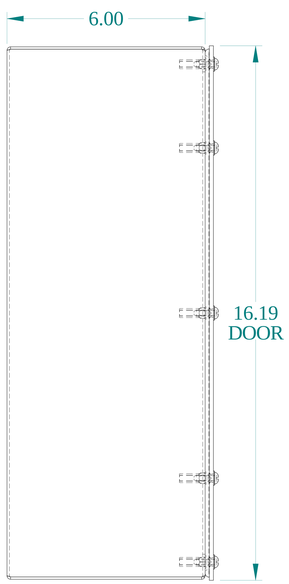

SIDE VIEW

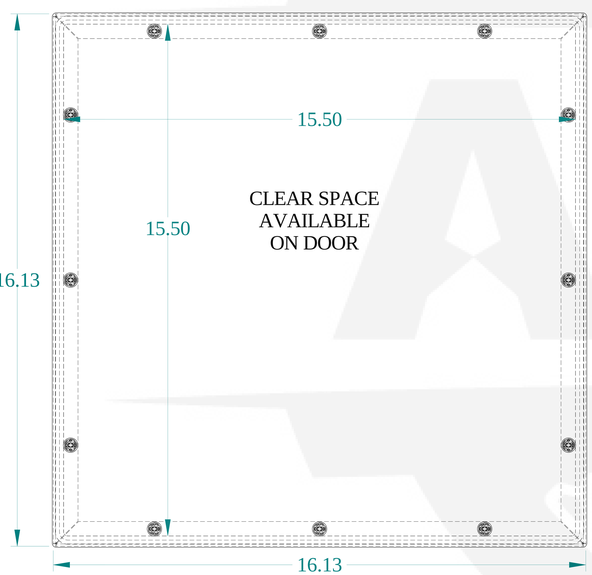

FRONT VIEW

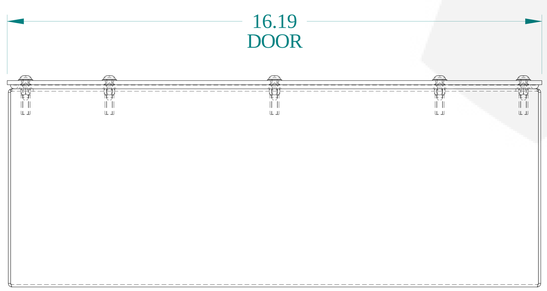

BOTTOM VIEW

SIDE VIEW

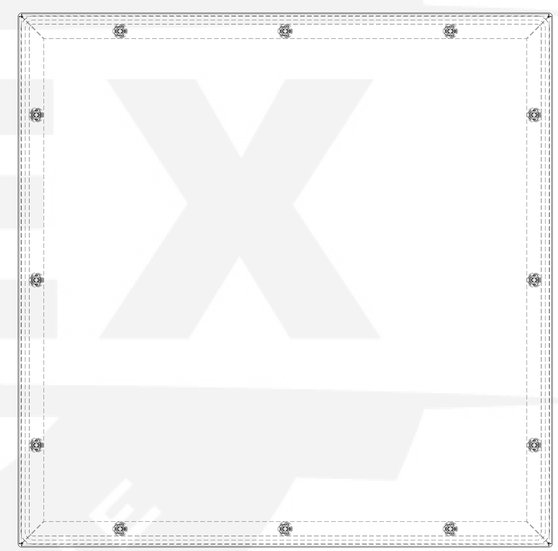

BACK VIEW

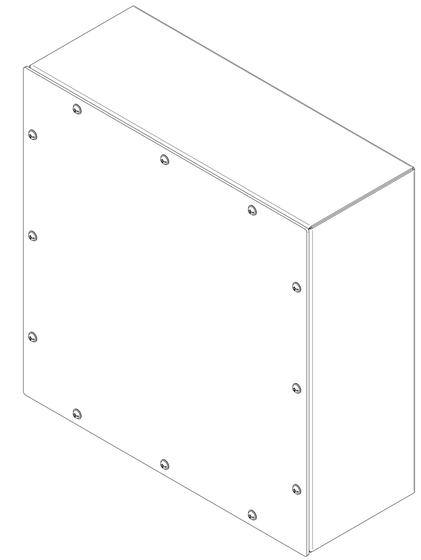

ISOMETRIC VIEW

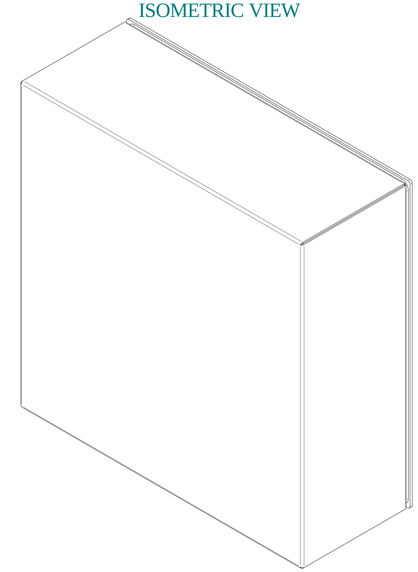

HAMMOND MANUFACTURING®

www.hammondmfg.com

Data subject to change without notice.

Part # : C4XSC16166SS	Date : Mar. 4, 2022

Link:www.hammfg.com/C4XSC16166SS