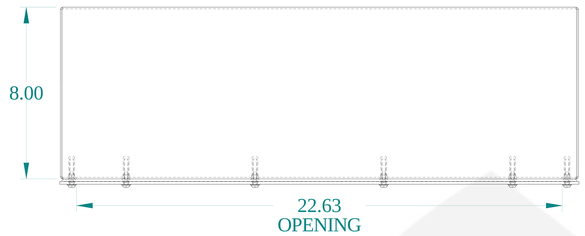

TOP VIEW

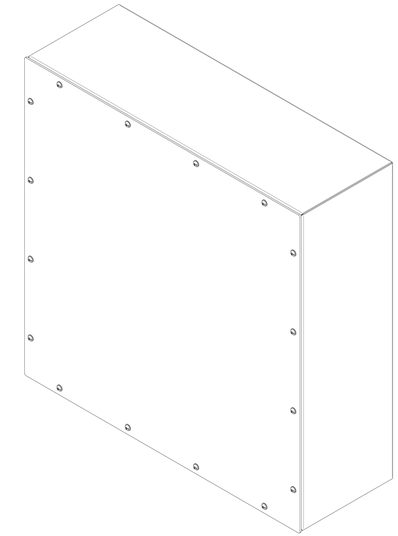

ISOMETRIC VIEW

SIDE VIEW

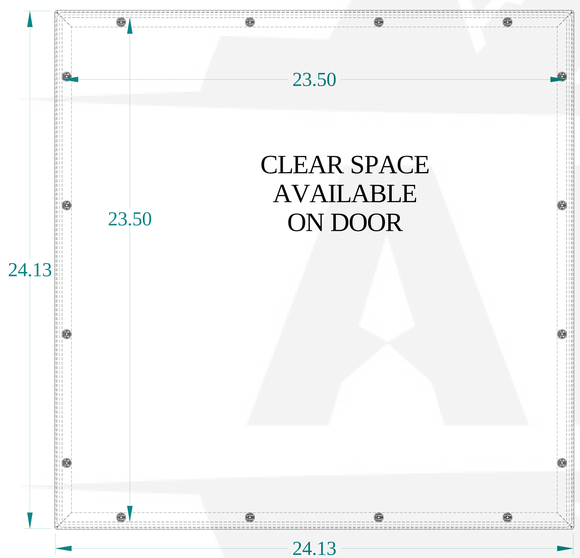

FRONT VIEW

SIDE VIEW

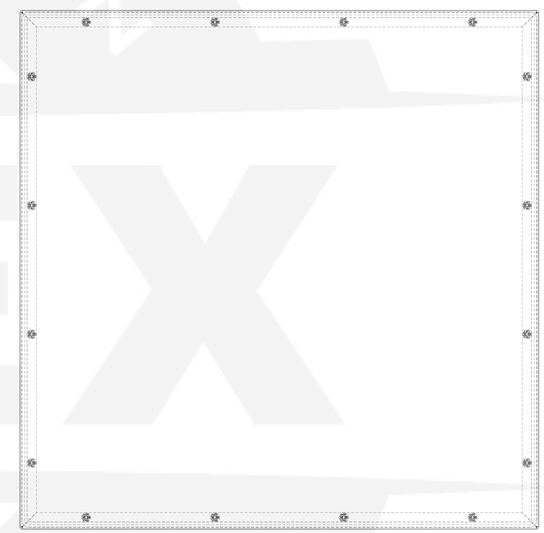

BACK VIEW

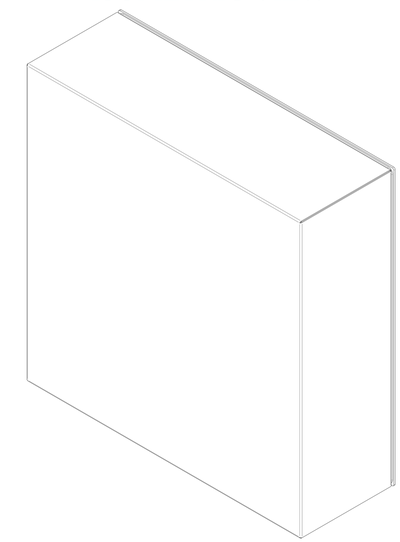

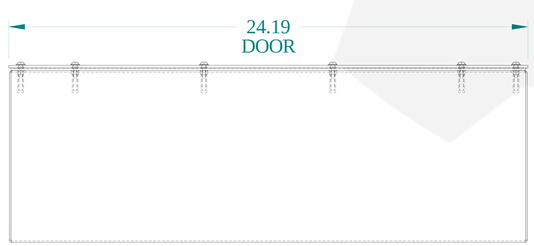

BOTTOM VIEW

HAMMOND MANUFACTURING®

www.hammondmfg.com

Data subject to change without notice.

Part # : C3SC24248GY	Date : Sep. 17, 2021

Link:www.hammfg.com/C3SC24248GY