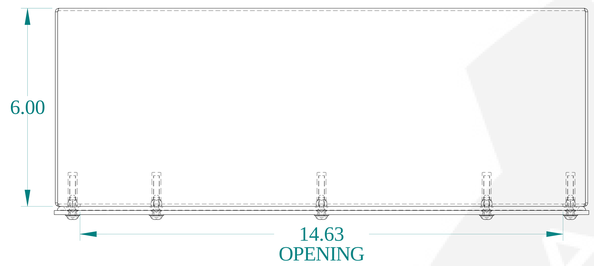

SIDE VIEW

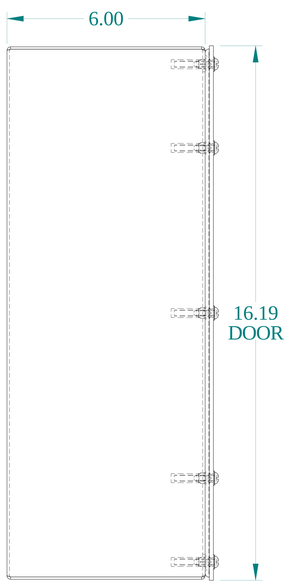

SIDE VIEW

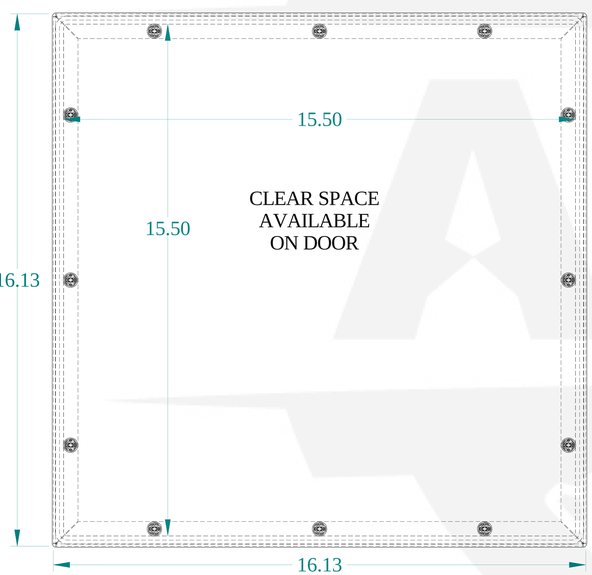

FRONT VIEW

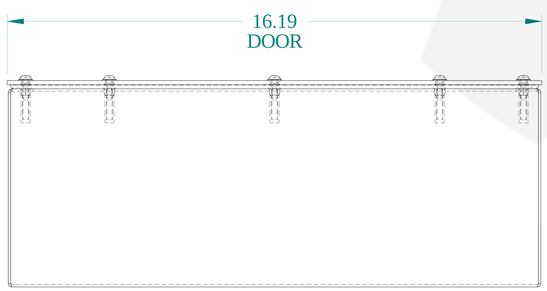

BOTTOM VIEW

SIDE VIEW

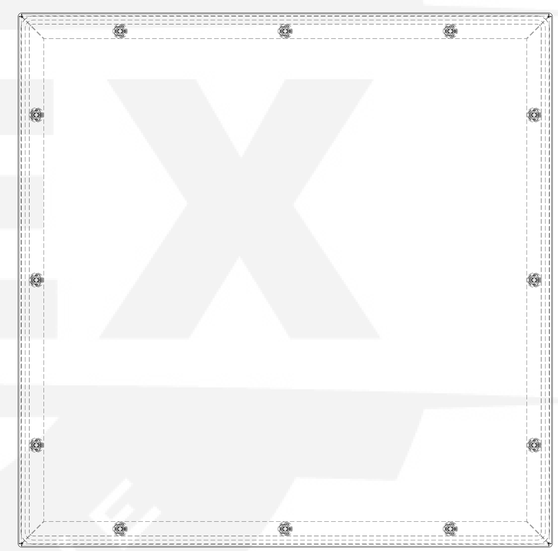

BACK VIEW

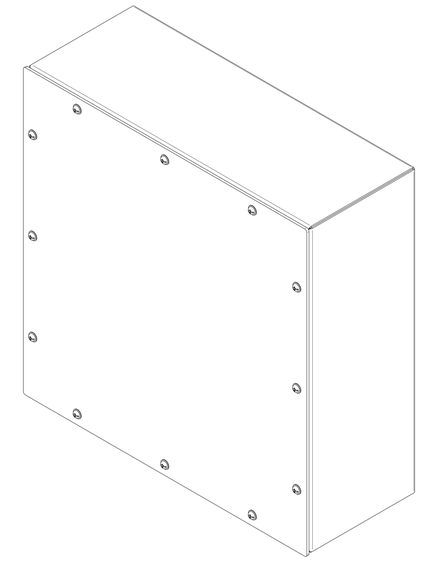

ISOMETRIC VIEW

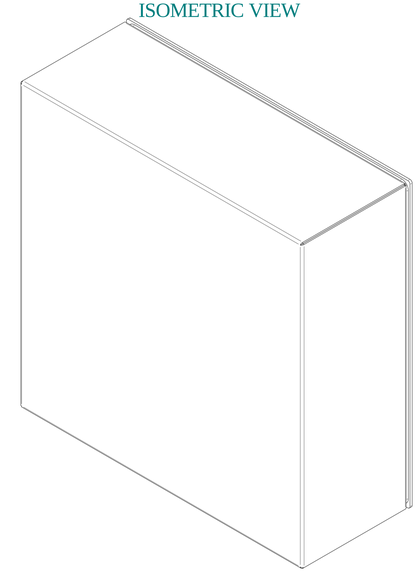

HAMMOND MANUFACTURING®

www.hammondmfg.com

Data subject to change without notice.

Part # : C3SC16166GY	Date : Sep. 17, 2021

Link:www.hammfg.com/C3SC16166GY