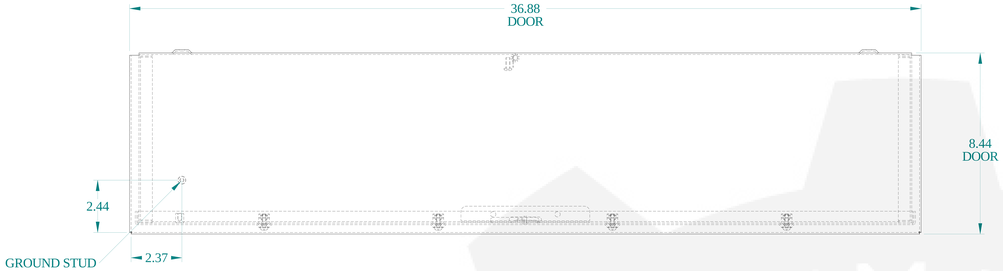

TOP VIEW

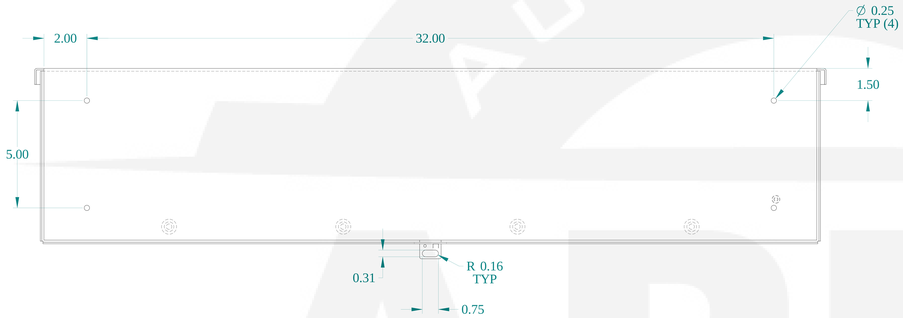

BACK VIEW

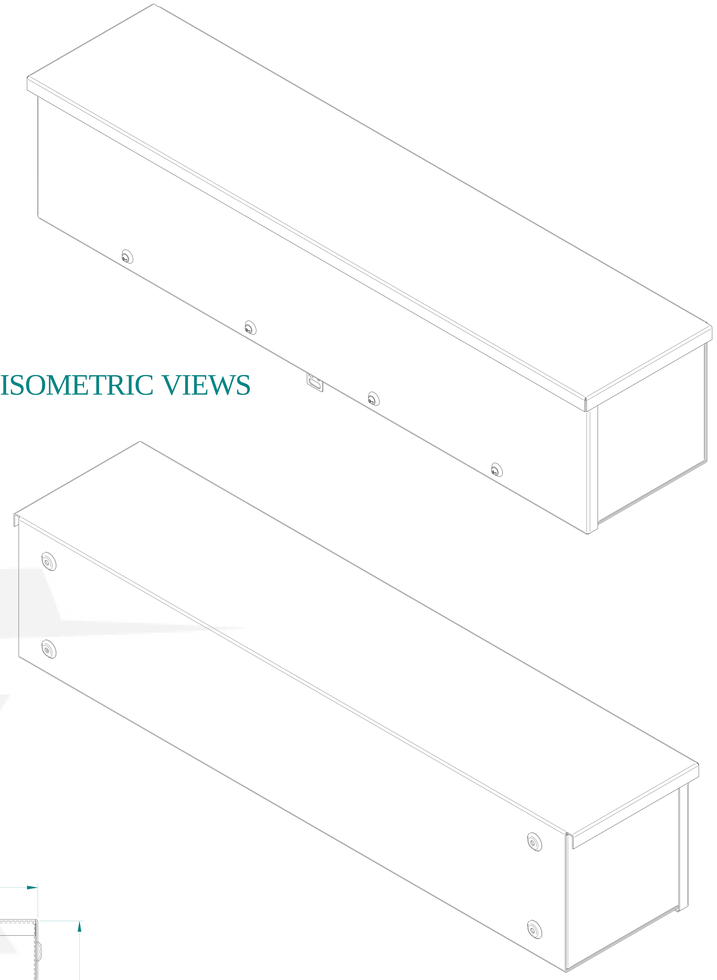

ISOMETRIC VIEWS

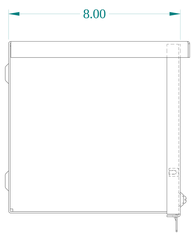

SIDE VIEW

FRONT VIEW

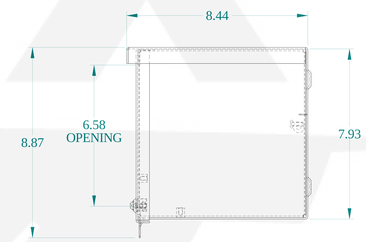

SIDE VIEW

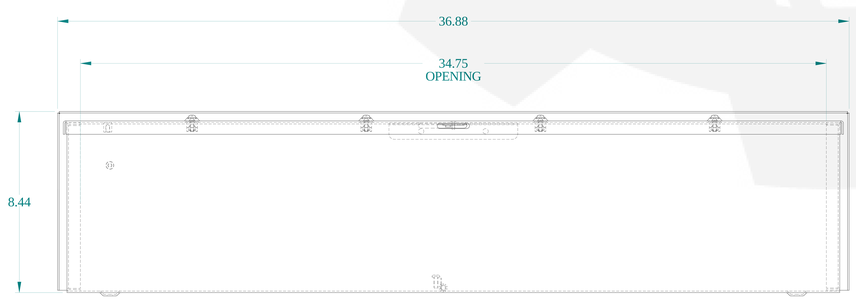

BOTTOM VIEW

HAMMOND MANUFACTURING®

www.hammondmfg.com

Data subject to change without notice.

Part # : C3RWT836G	Date : Jan. 4, 2021

Link:www.hammfg.com/C3RWT836G