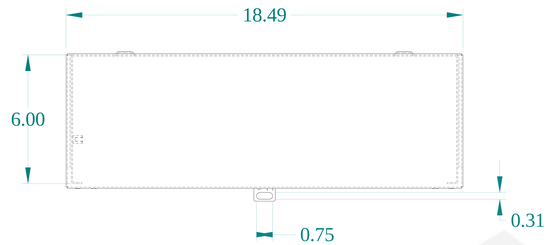

TOP VIEW

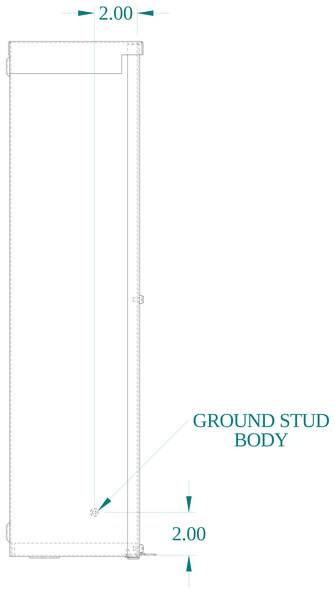

SIDE VIEW

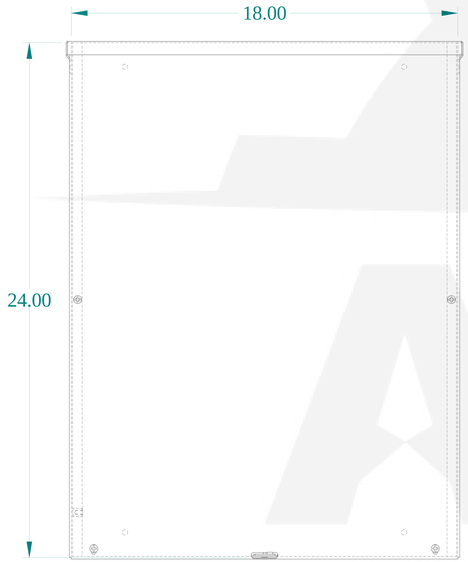

FRONT VIEW

SIDE VIEW

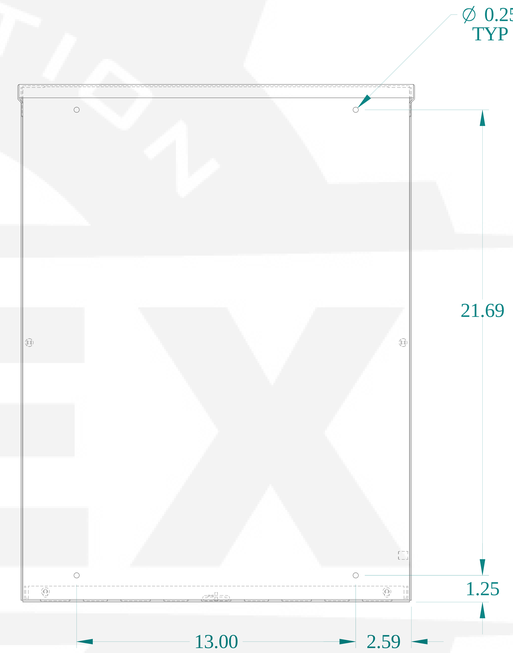

BACK VIEW

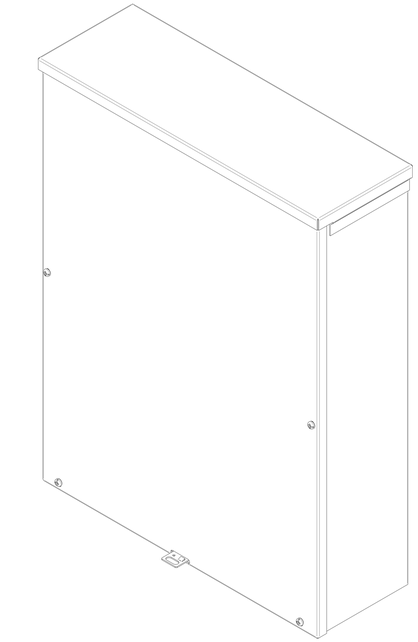

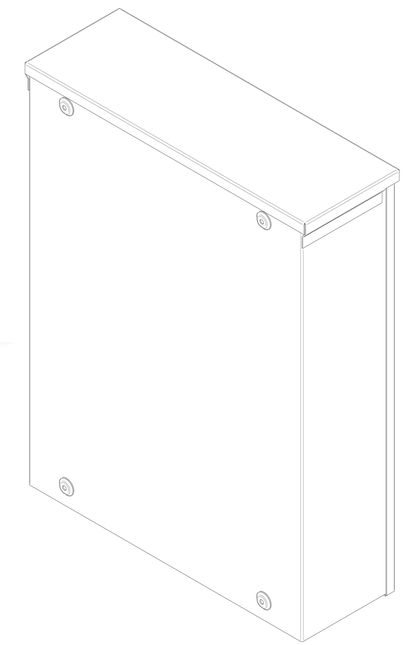

ISOMETRIC VIEWS

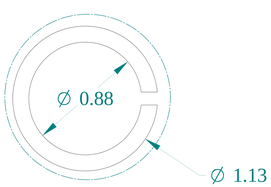

DETAIL Y
TYP

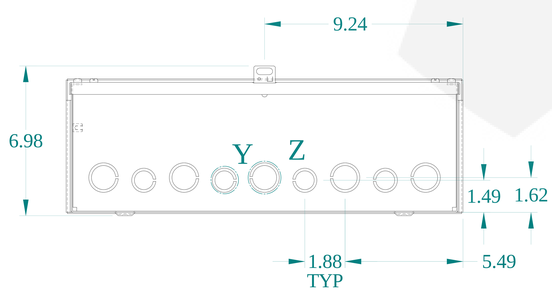

BOTTIOM VIEW

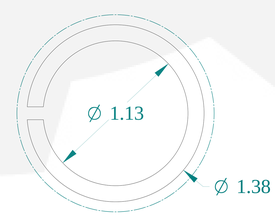

DETAIL Z
TYP

HAMMOND MANUFACTURING®

www.hammondmfg.com

Data subject to change without notice.

Part # : C3R24186SC	Date : Mar. 23, 2019

Link:www.hammfg.com/C3R24186SC