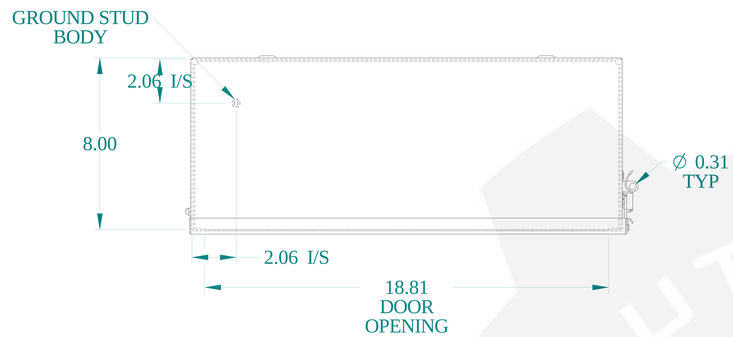

TOP VIEW

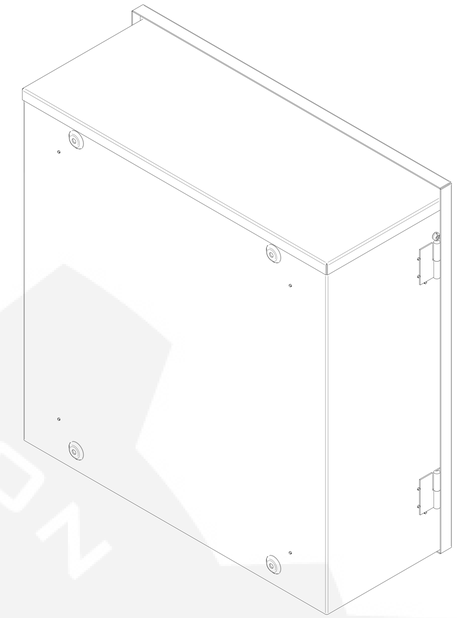

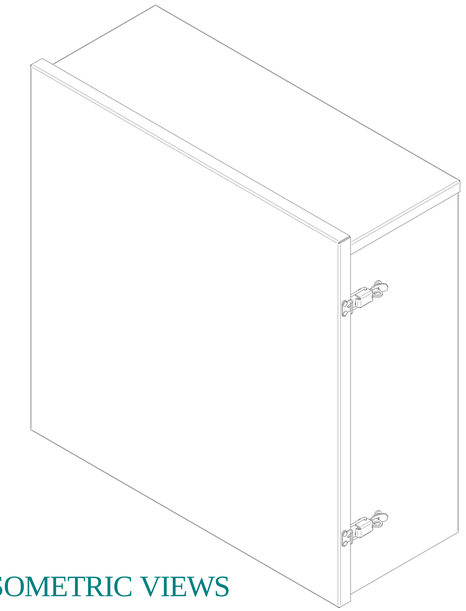

ISOMETRIC VIEWS

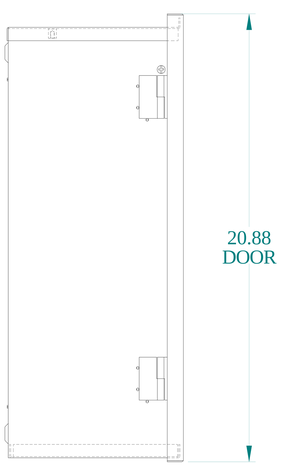

SIDE VIEW

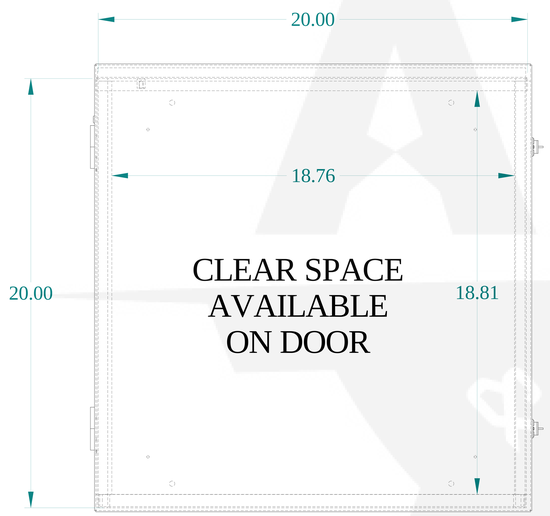

FRONT VIEW

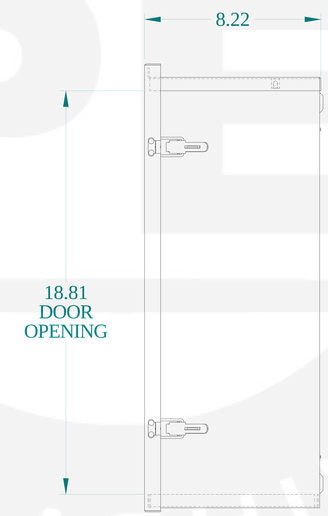

SIDE VIEW

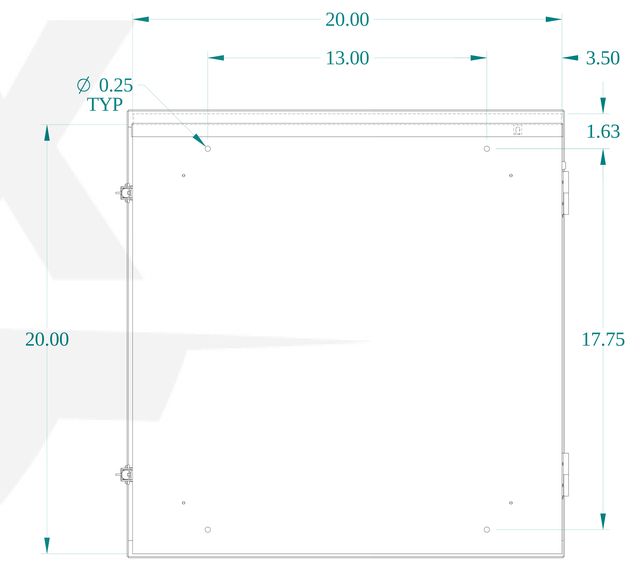

BACK VIEW

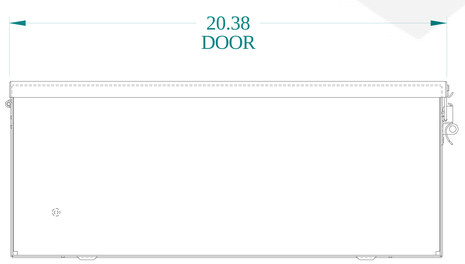

BOTTOM VIEW

HAMMOND MANUFACTURING®

www.hammondmfg.com

Data subject to change without notice.

Part # : C3R20208HCLO	Date : Feb. 10, 2021

Link:www.hammfg.com/C3R20208HCLO