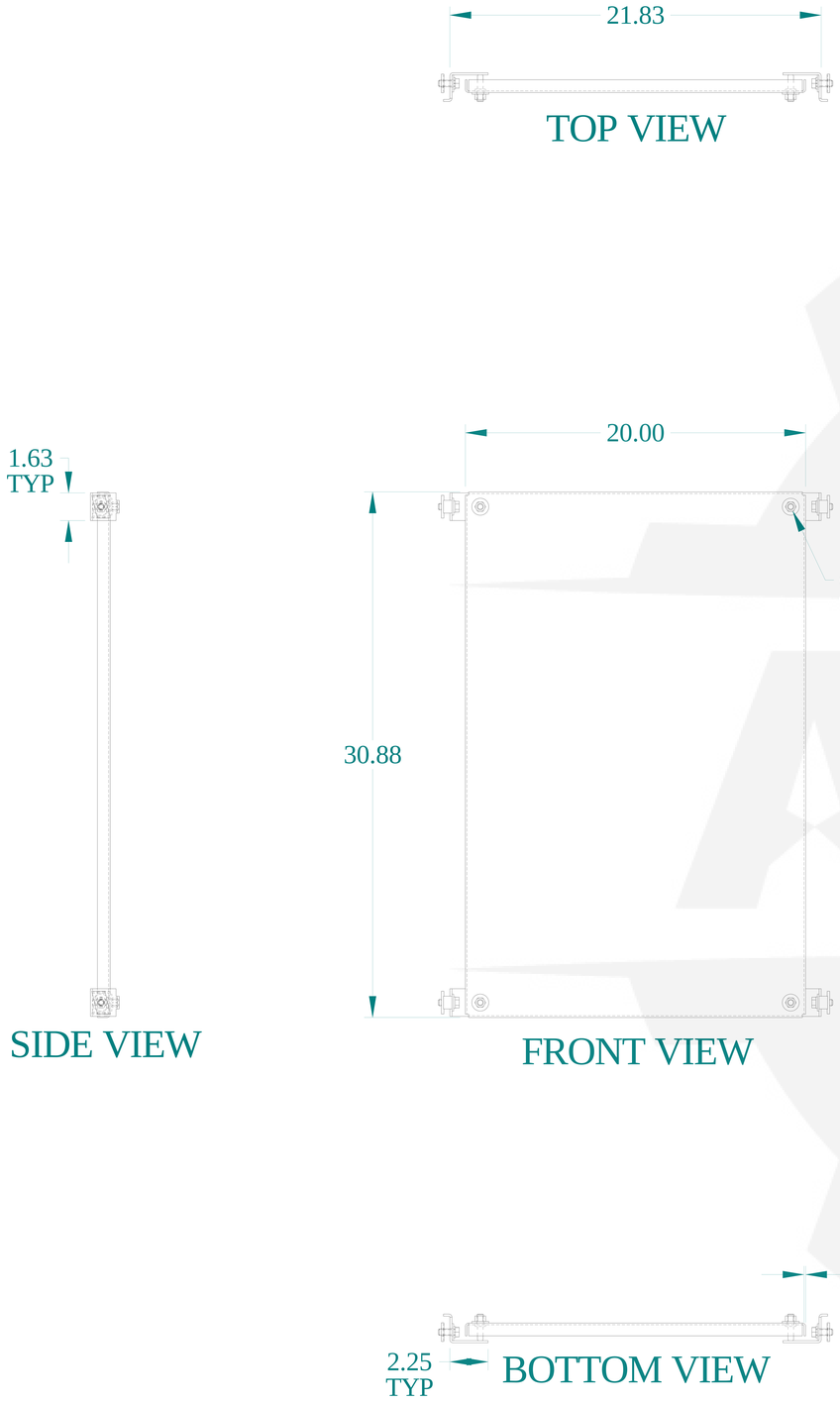

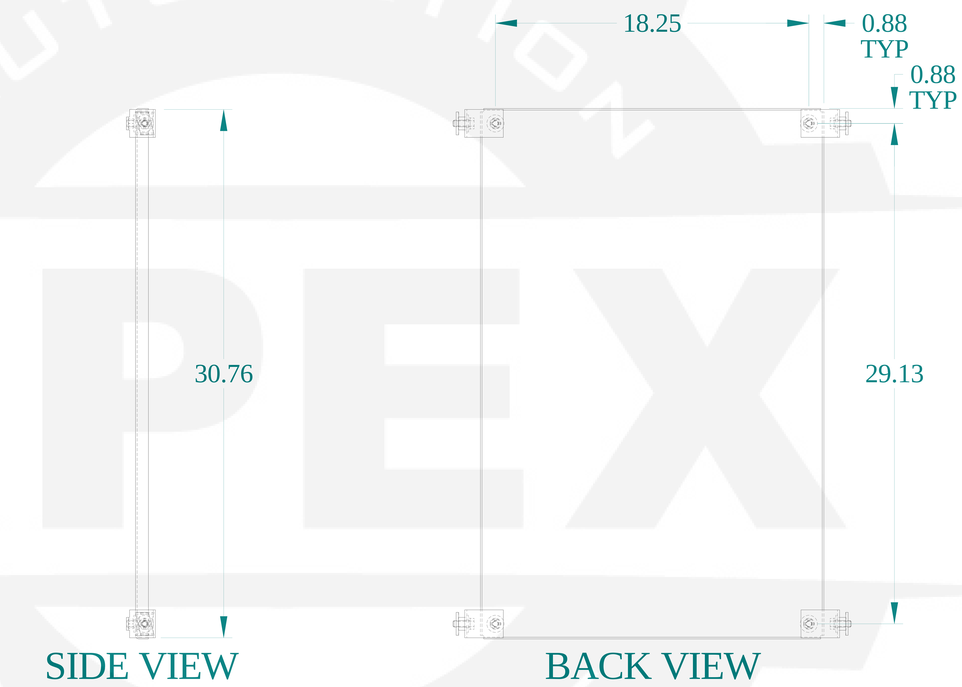

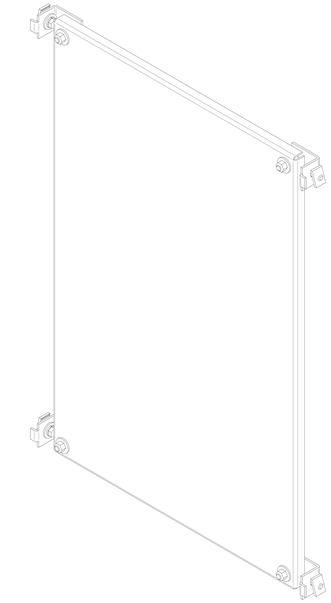

ISOMETRIC VIEWS

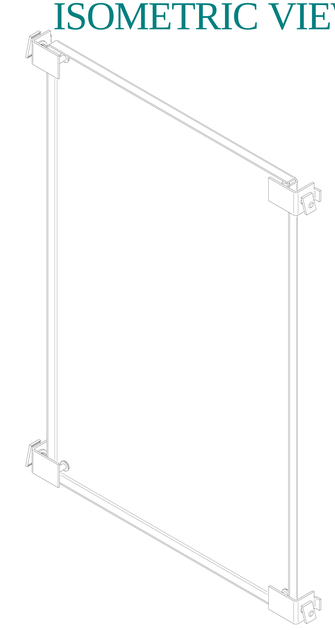

HAMMOND MANUFACTURING®

www.hammondmfg.com

Data subject to change without notice.

Part # : 72WHWG	Date : Feb 10, 2020

Link:www.hammfg.com/72WHWG