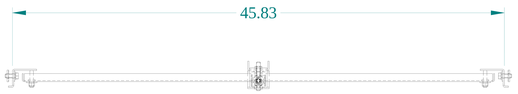

TOP VIEW

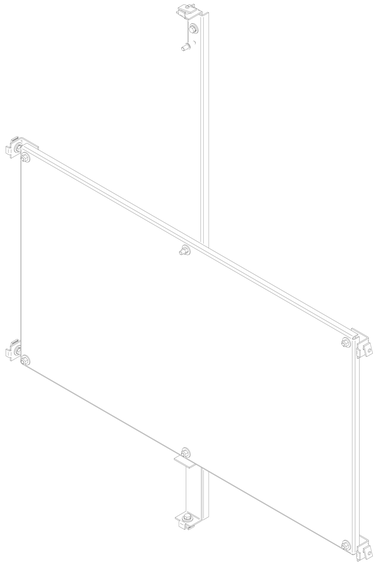

ISOMETRIC VIEWS

SIDE VIEW

FRONT VIEW

SIDE VIEW

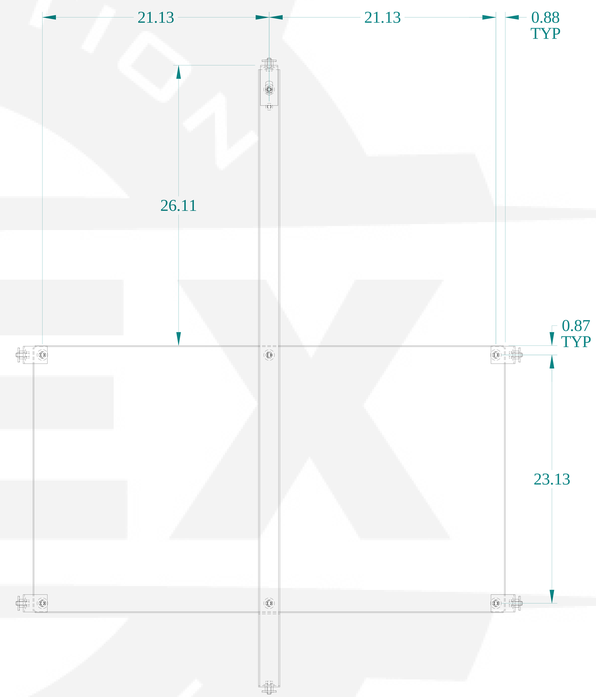

BACK VIEW

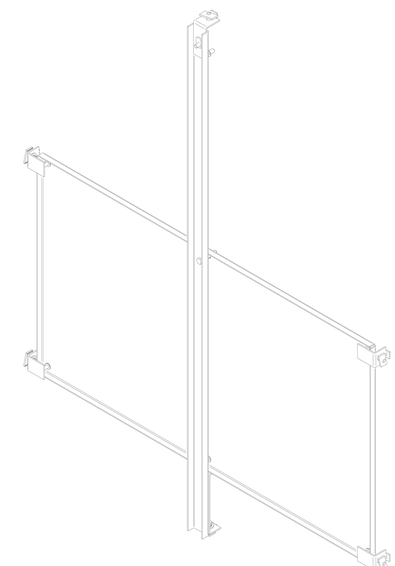

BOTTOM VIEW

HAMMOND MANUFACTURING®

www.hammondmfg.com

Data subject to change without notice.

Part # : 60AWHWG	Date : Feb 10, 2020

Link:www.hammfg.com/60AWHWG