TOP VIEW

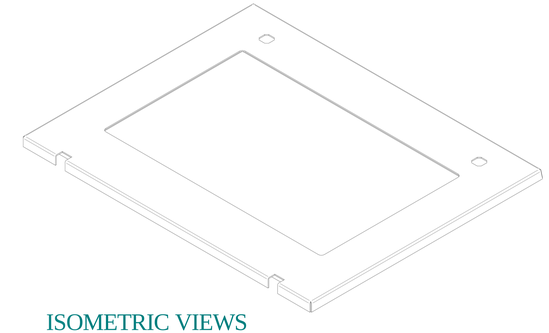

ISOMETRIC VIEWS

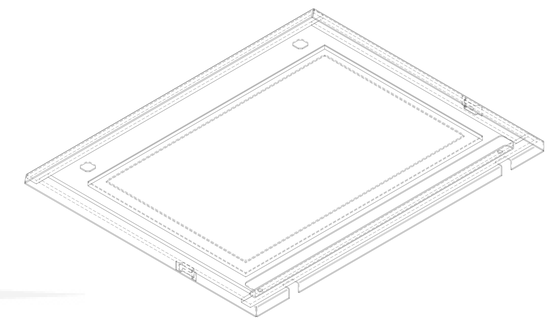

SIDE VIEW

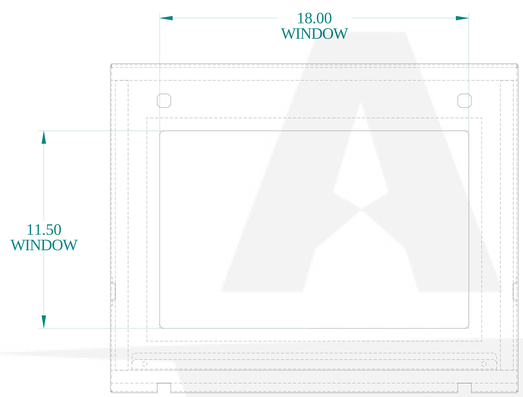

FRONT VIEW

SIDE VIEW

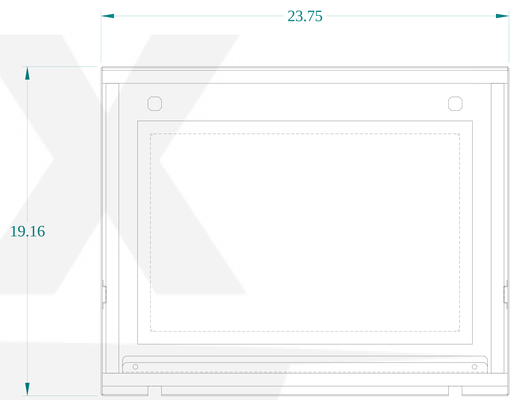

BACK VIEW

BOTTOM VIEW

HAMMOND MANUFACTURING®

www.hammondmfg.com

Data subject to change without notice.

Part # : 2CSTW24	Date : Mar. 24, 2019

Link:www.hammfg.com/2CSTW24