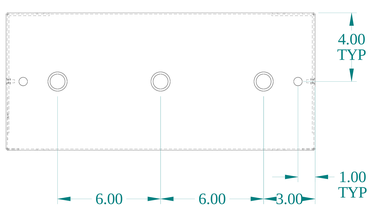


SIDE VIEW

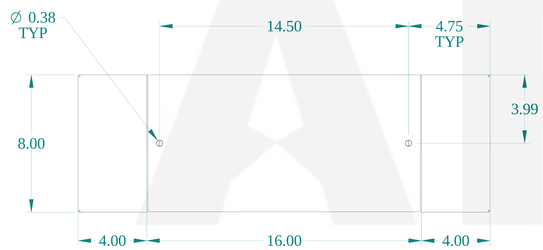


FRONT VIEW

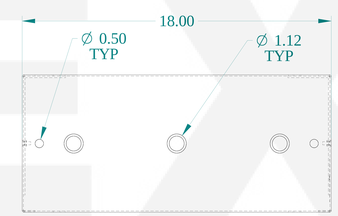


SIDE VIEW

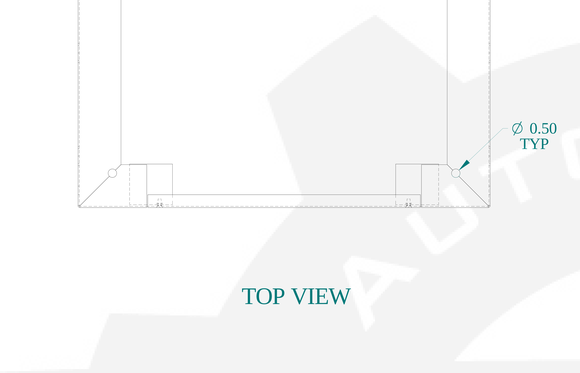


BOTTOM VIEW

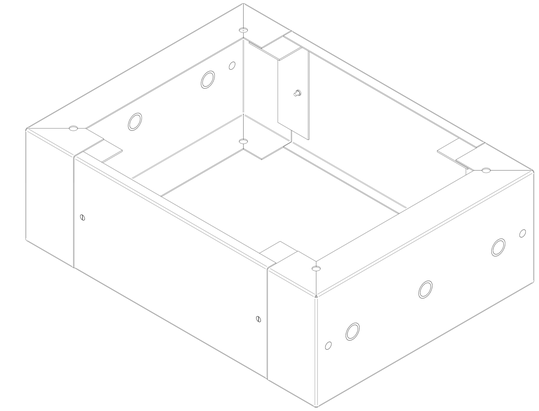

TOP VIEW

ISOMETRIC VIEWS

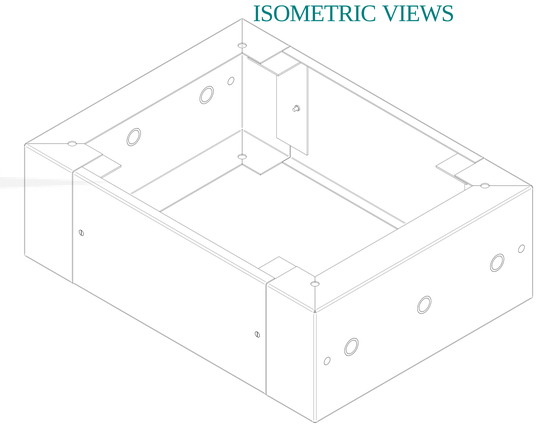

HAMMOND MANUFACTURING®

www.hammondmfg.com

Data subject to change without notice.

| | |
|---|---|
| Part # : 2CSP82418 | Date : Mar. 24, 2019 |

Link:www.hammfg.com/2CSP82418