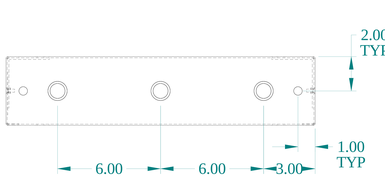


SIDE VIEW

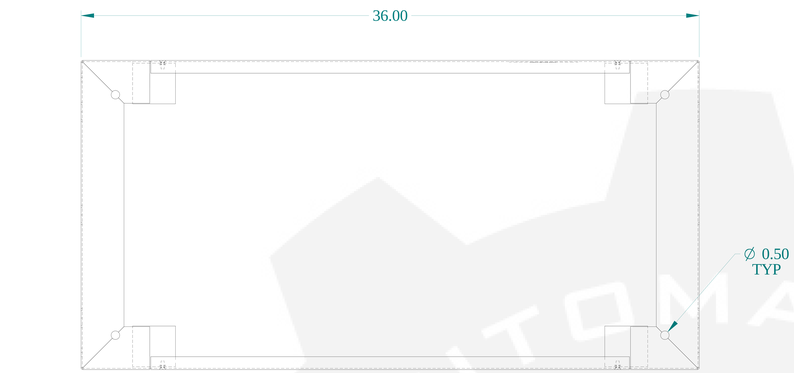


TOP VIEW

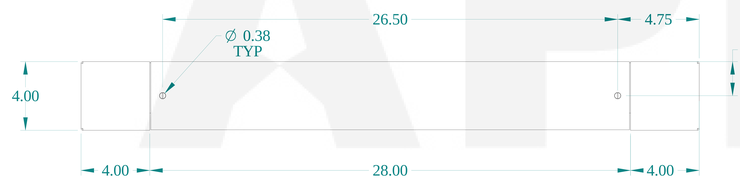


FRONT VIEW

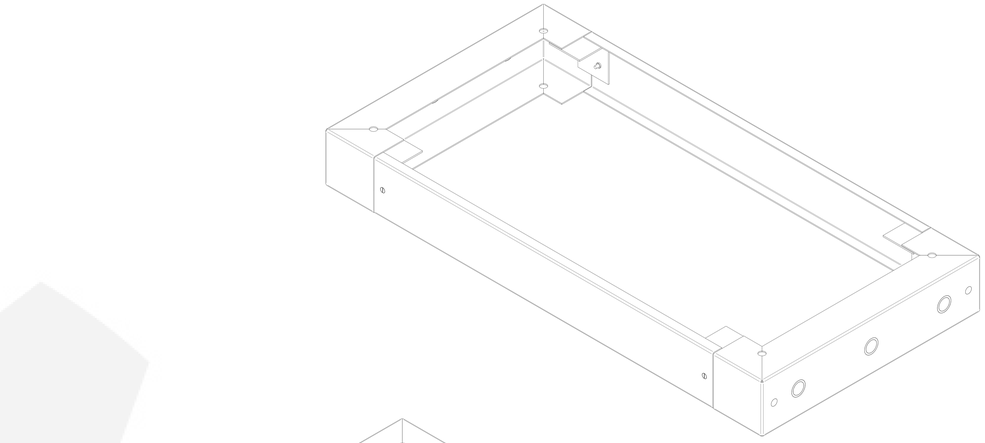

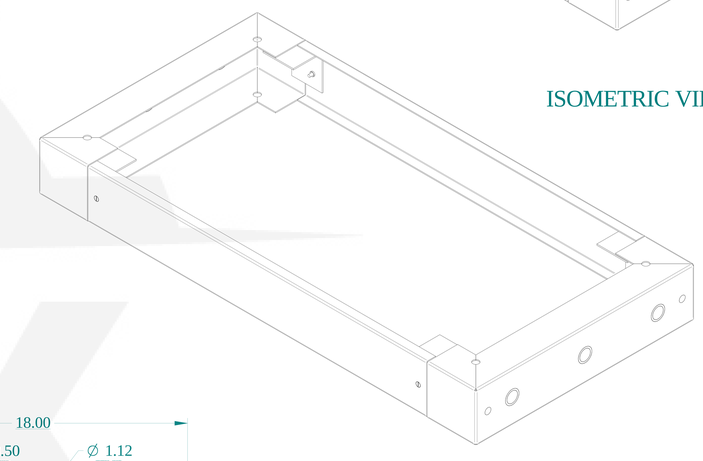

ISOMETRIC VIEWS

SIDE VIEW

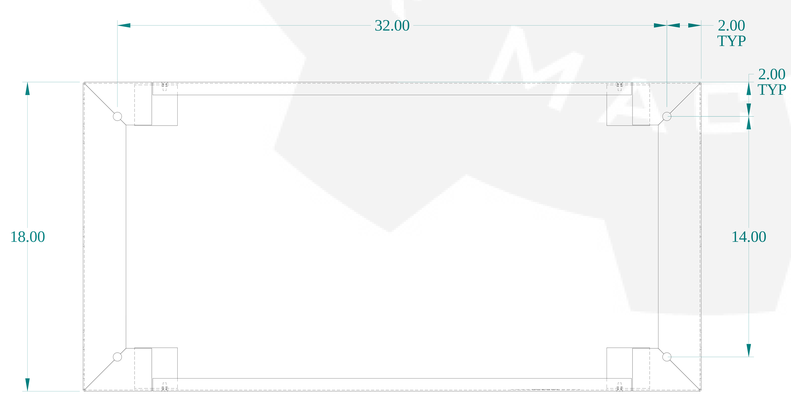


BOTTOM VIEW

HAMMOND MANUFACTURING®

www.hammondmfg.com

Data subject to change without notice.

| | |
|---|---|
| Part # : 2CSP43618 | Date : Mar. 24, 2019 |

Link:www.hammfg.com/2CSP43618