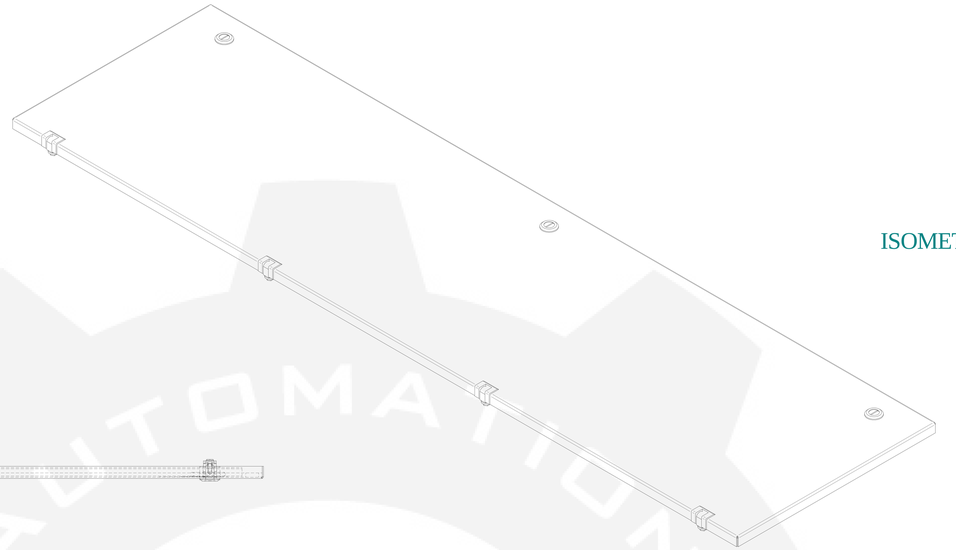

ISOMETRIC VIEWS

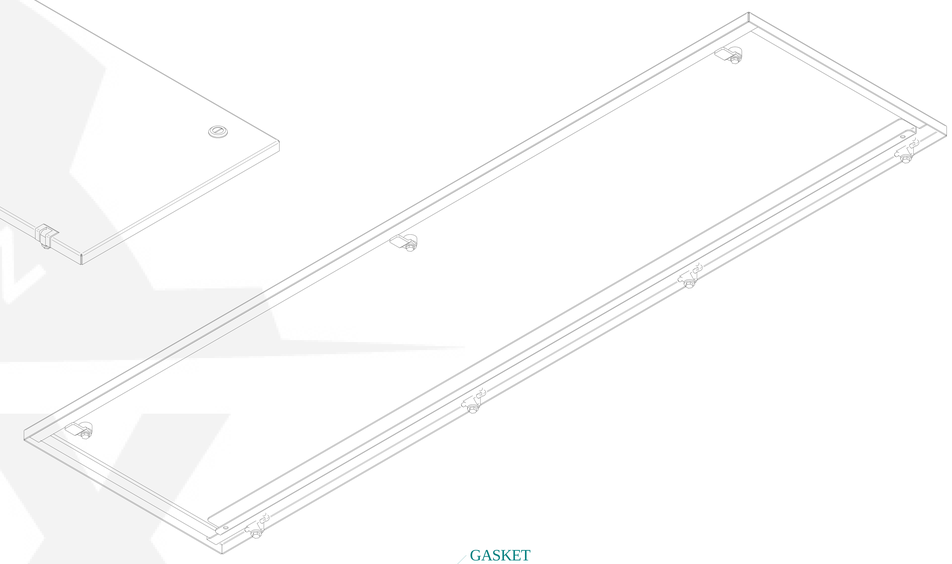

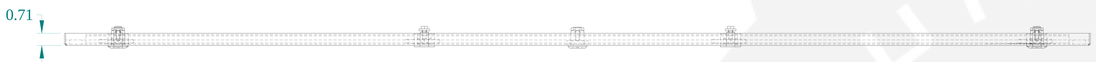

TOP VIEW

SIDE VIEW

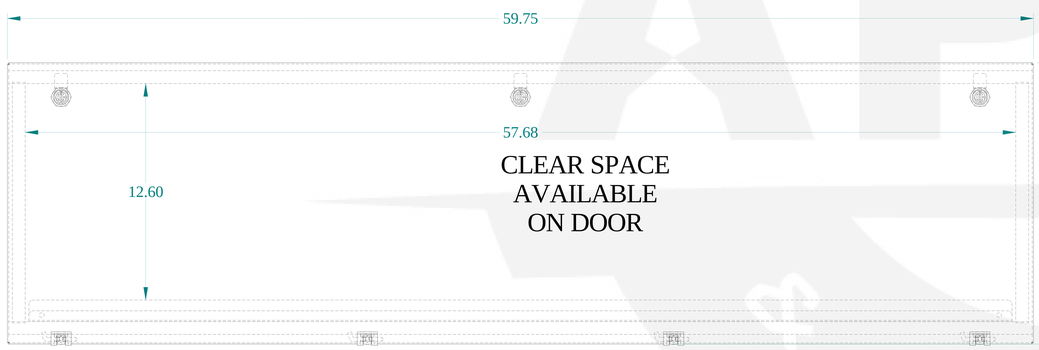

FRONT VIEW

SIDE VIEW

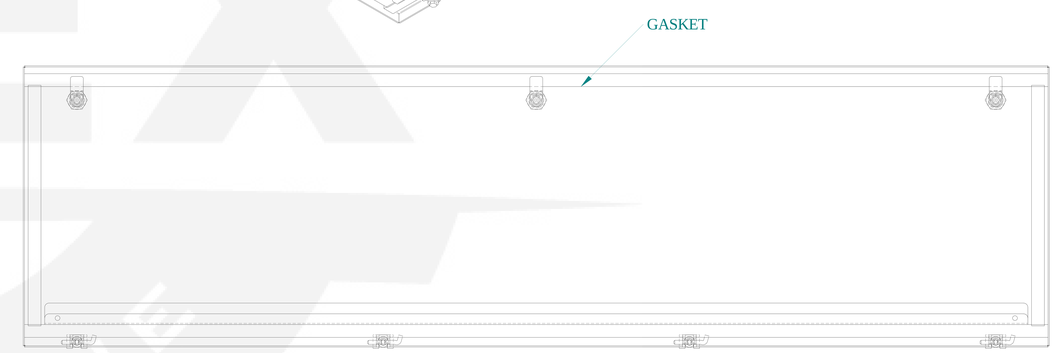

BACK VIEW

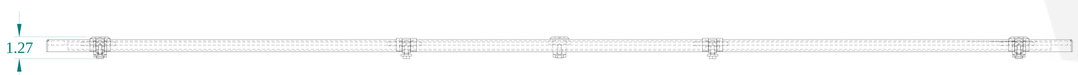

BOTTOM VIEW

HAMMOND MANUFACTURING®

www.hammondmfg.com

Data subject to change without notice.

Part # : 2CLDC6036	Date : Mar. 24, 2019

Link:www.hammfg.com/2CLDC6036