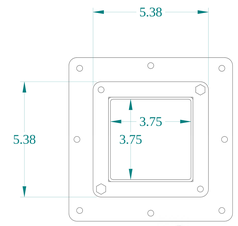


TOP VIEW

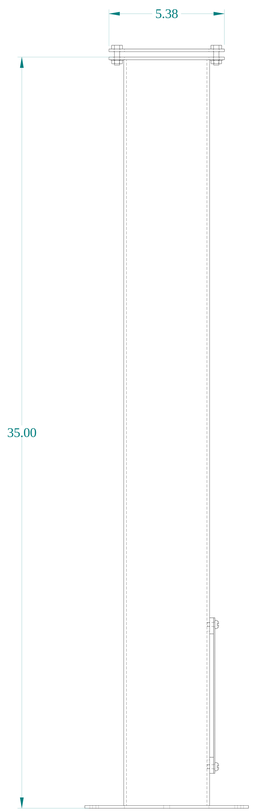


SIDE VIEW

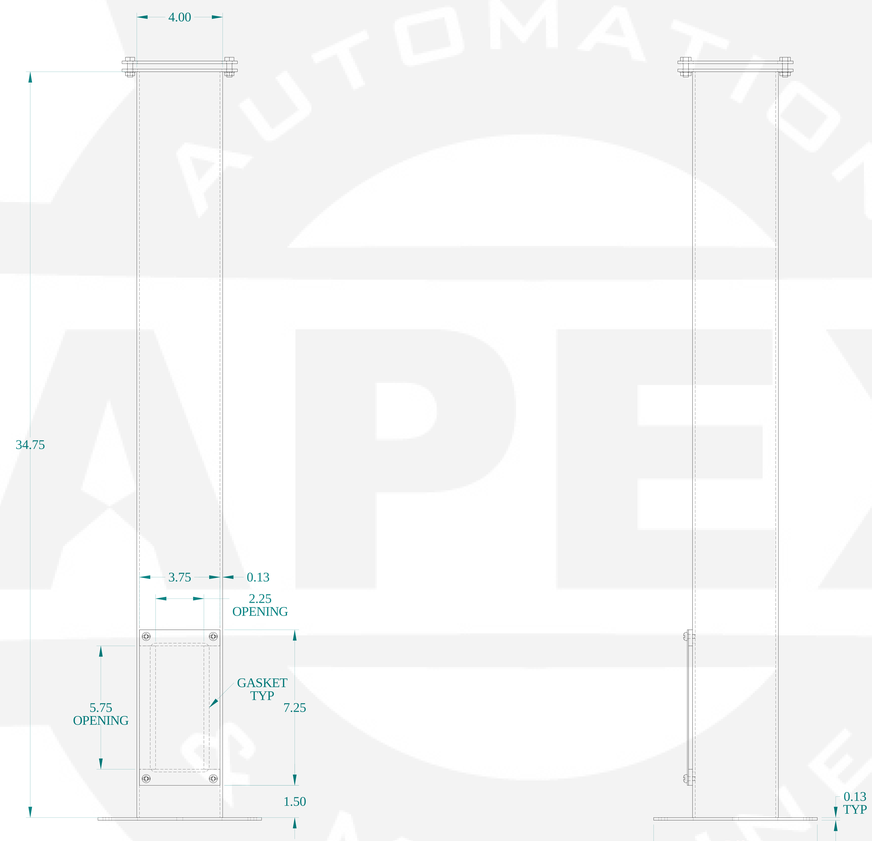


FRONT VIEW

SIDE VIEW

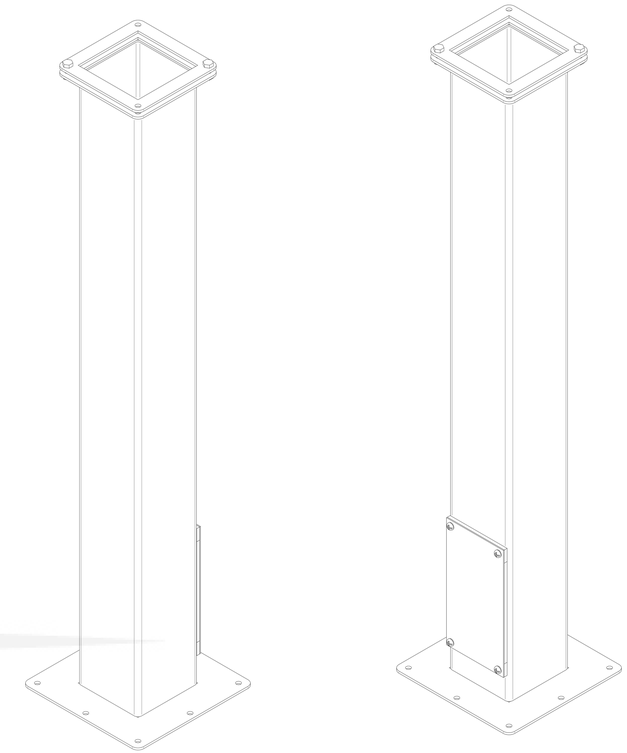

ISOMETRIC VIEWS

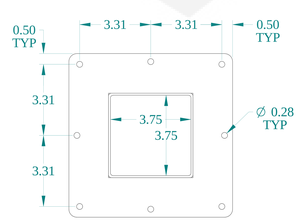


BOTTOM VIEW

HAMMOND MANUFACTURING®

www.hammondmfg.com

Data subject to change without notice.

| | |
|---|---|
| Part # : 1495C35 | Date : Mar. 24, 2019 |

Link:www.hammfg.com/1495C35