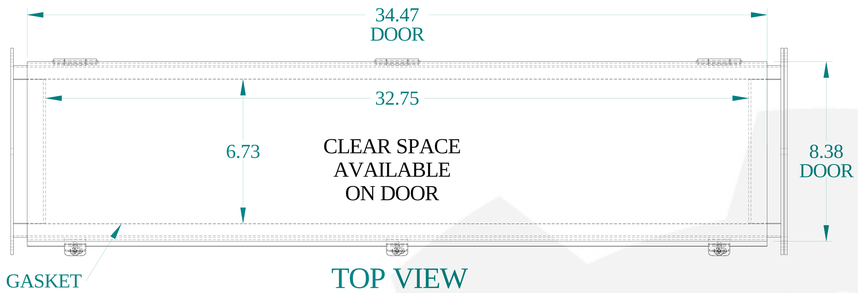


TOP VIEW

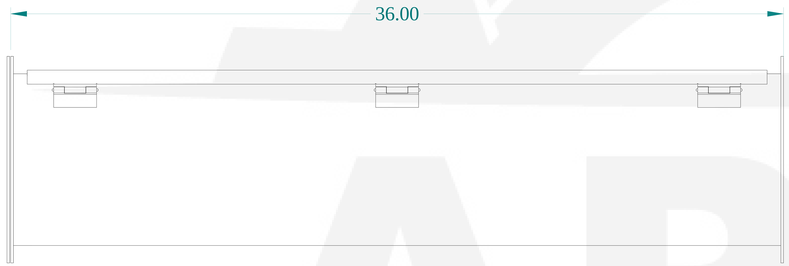


BACK VIEW

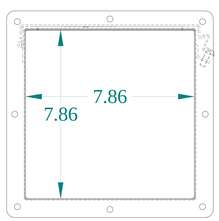


SIDE VIEW

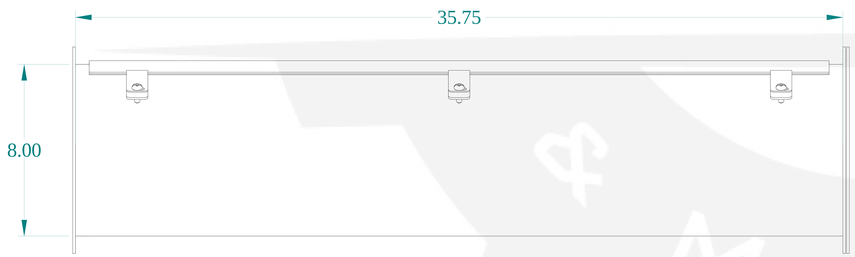


FRONT VIEW

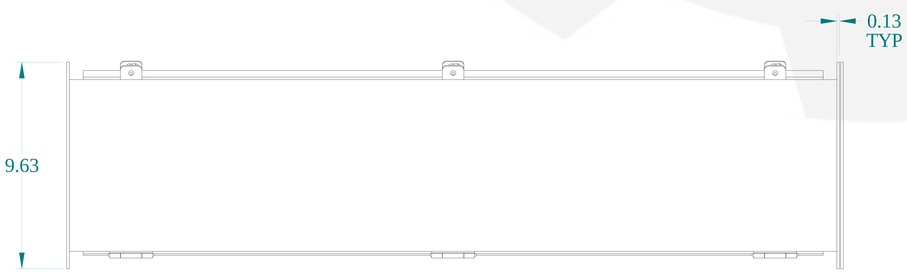


BOTTOM VIEW

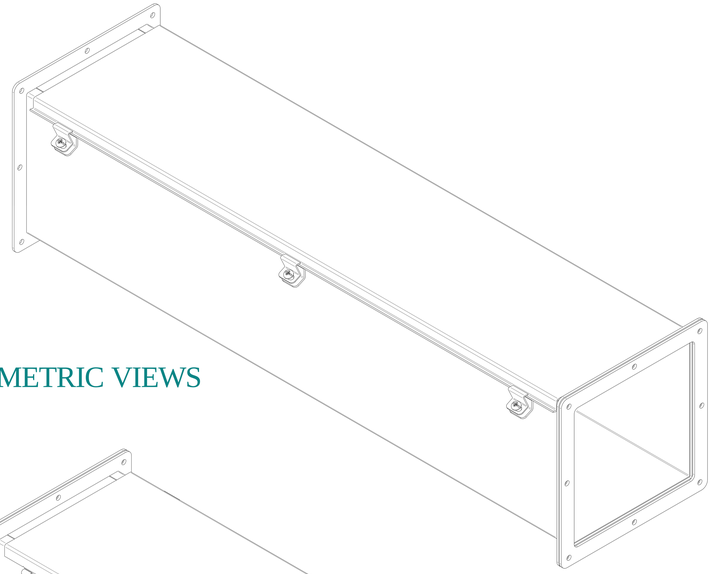

ISOMETRIC VIEWS

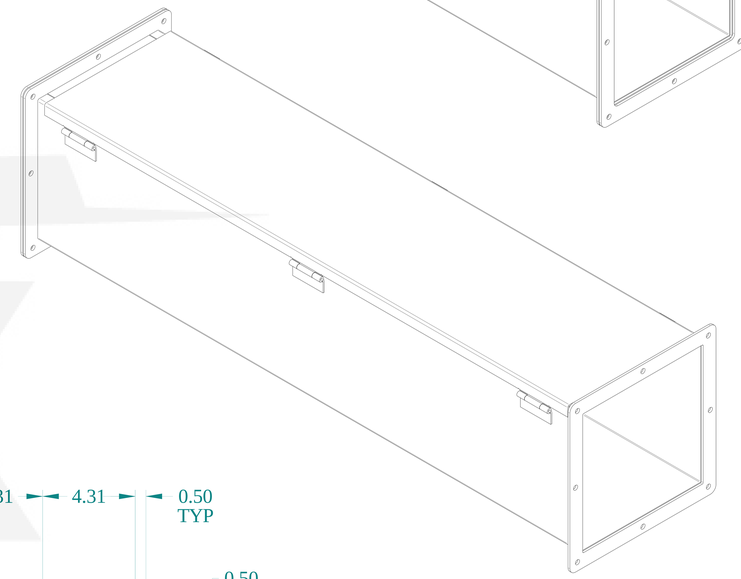

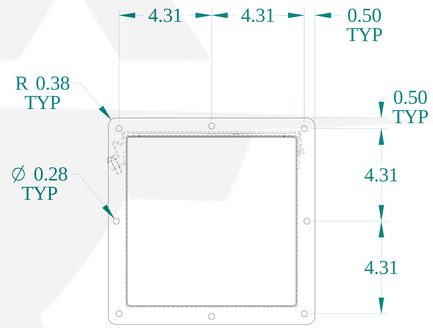


SIDE VIEW

HAMMOND MANUFACTURING®

www.hammondmfg.com

Data subject to change without notice.

| | |
|---|---|
| Part # : 1487E36SS | Date : Jan. 20, 2020 |

Link:www.hammfg.com/1487E36SS