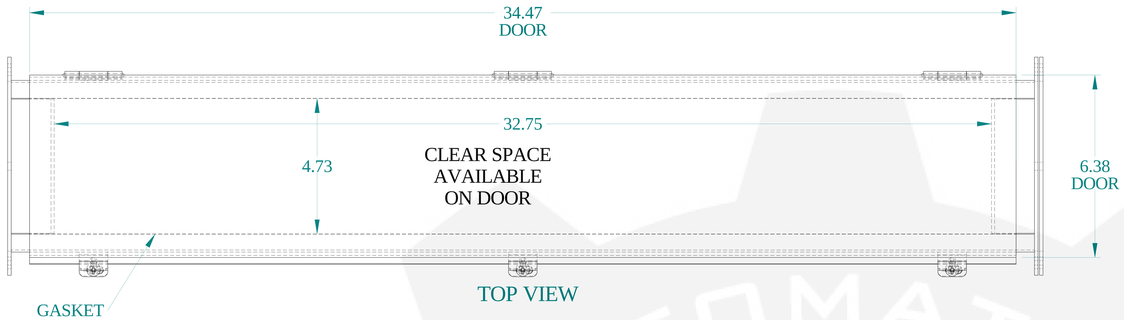

TOP VIEW

BACK VIEW

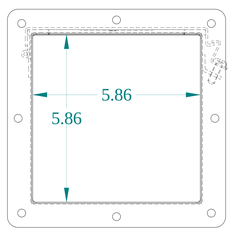

SIDE VIEW

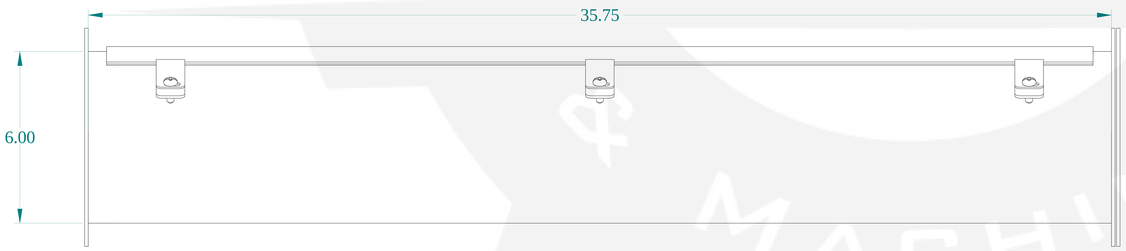

FRONT VIEW

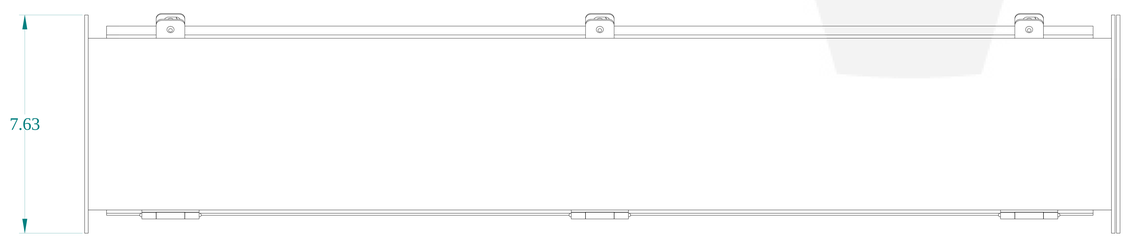

BOTTOM VIEW

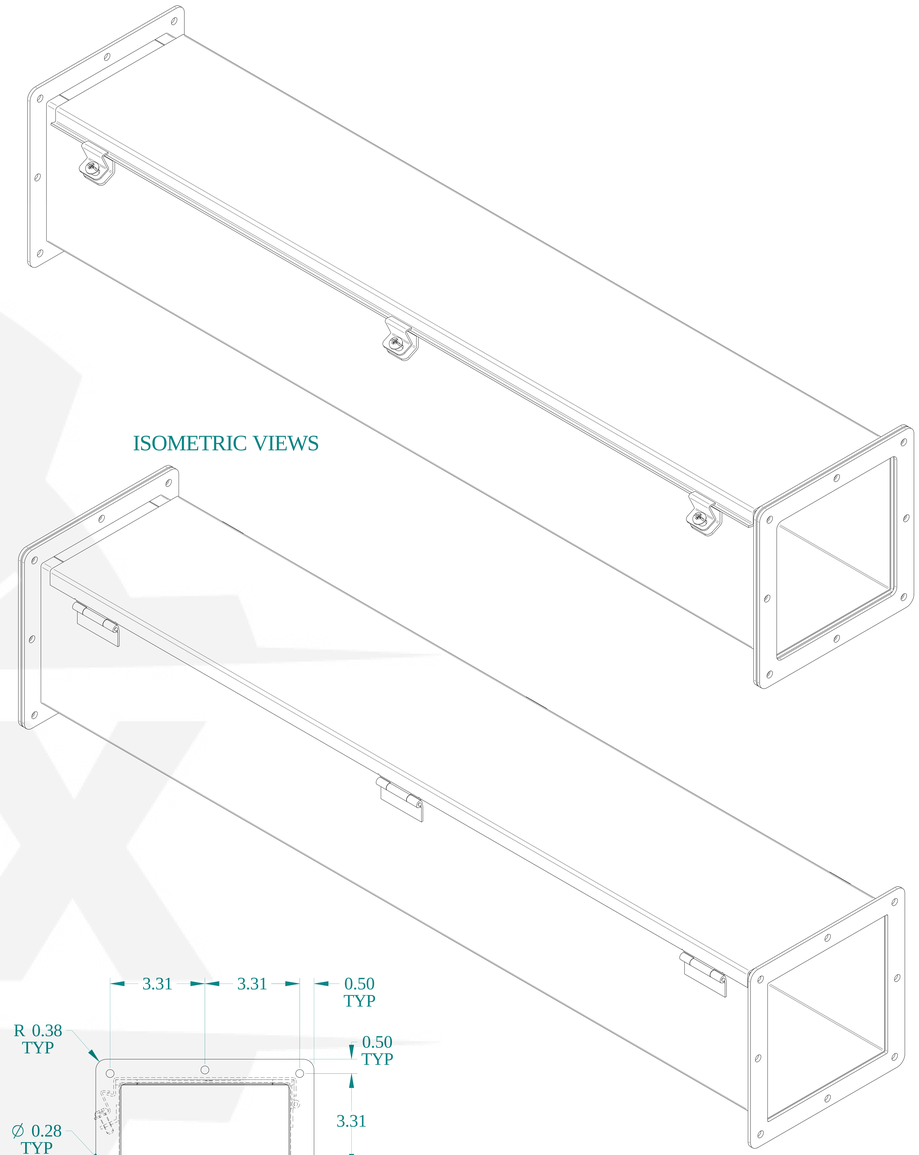

ISOMETRIC VIEWS

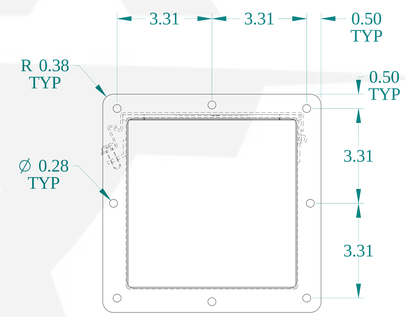

SIDE VIEW

HAMMOND MANUFACTURING®

www.hammondmfg.com

Data subject to change without notice.

Part # : 1487D36SS	Date : Jan. 20, 2020

Link:www.hammfg.com/1487D36SS