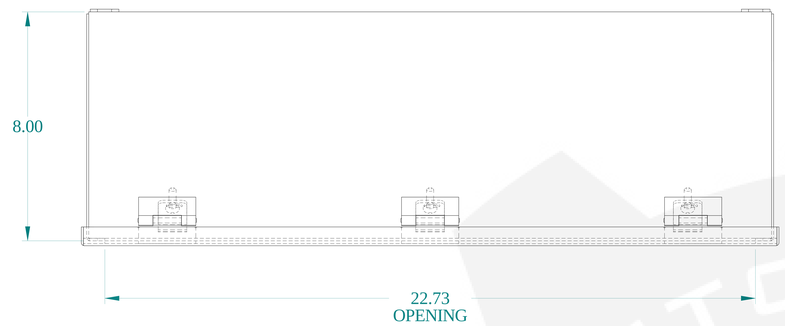


TOP VIEW

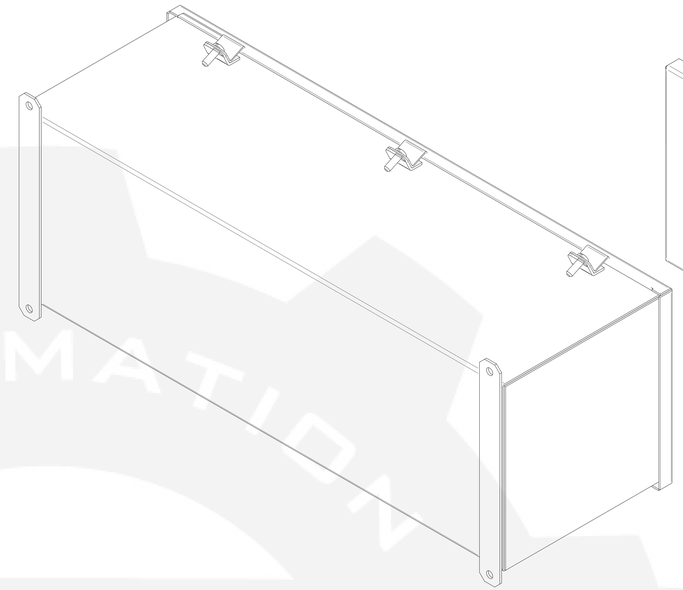

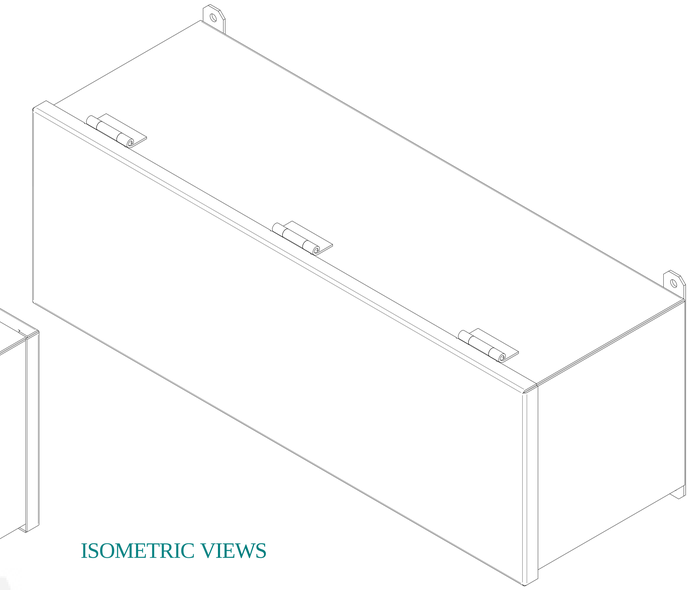

ISOMETRIC VIEWS

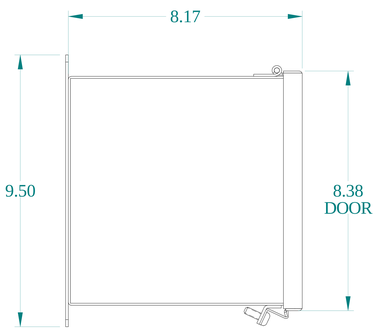


SIDE VIEW

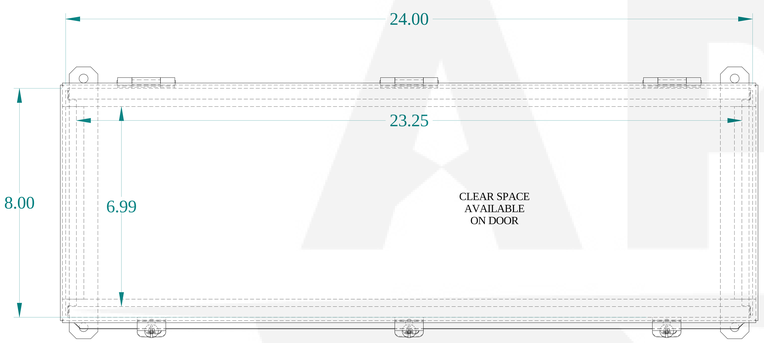


FRONT VIEW

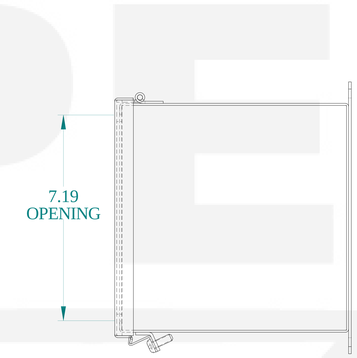


SIDE VIEW

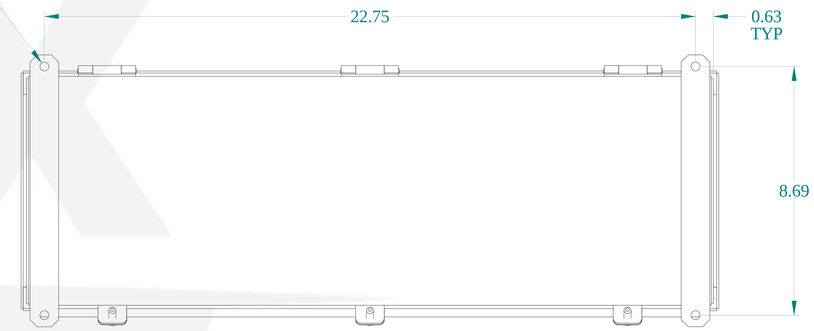


BACK VIEW

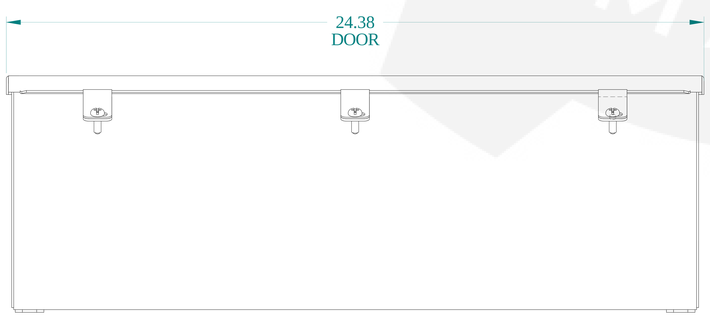


BOTTOM VIEW

HAMMOND MANUFACTURING®

www.hammondmfg.com

Data subject to change without notice.

| | |
|---|---|
| Part # : 1486E24SS | Date : Aug. 25, 2021 |

Link:www.hammfg.com/1486E24SS