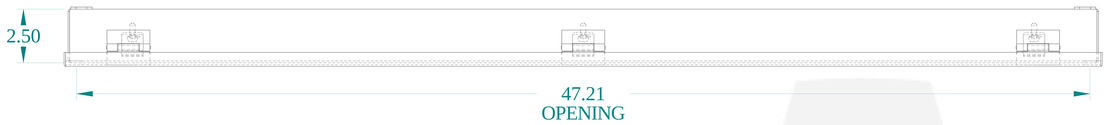

TOP VIEW

ISOMETRIC VIEWS

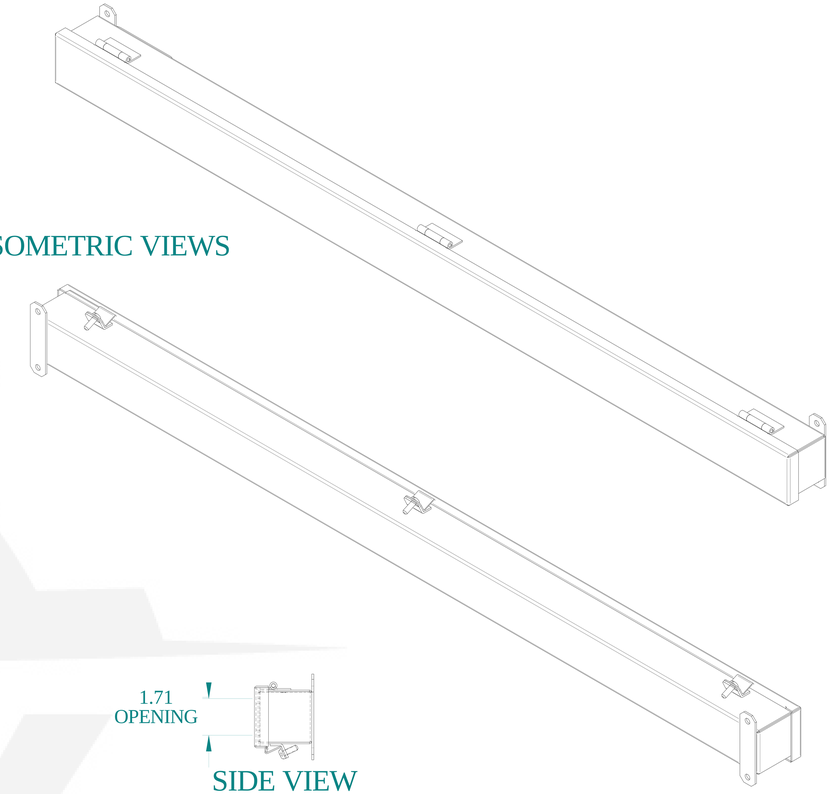

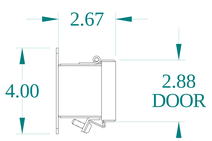

SIDE VIEW

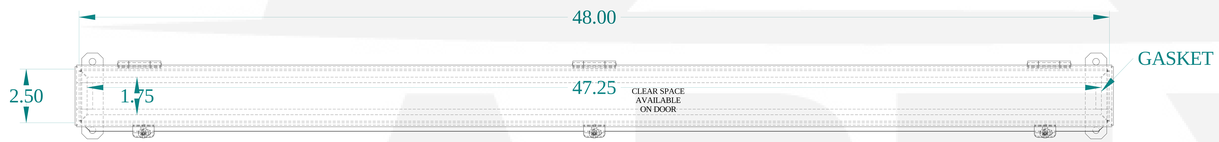

FRONT VIEW

SIDE VIEW

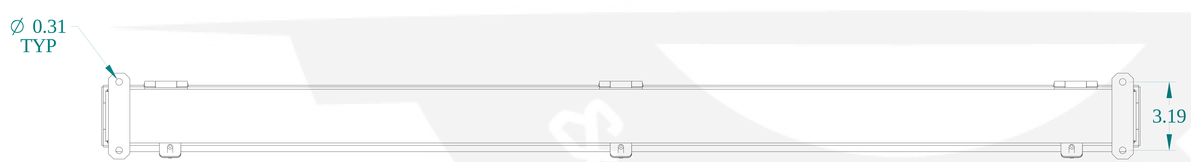

BACK VIEW

BOTTOM VIEW

HAMMOND MANUFACTURING®

www.hammondmfg.com

Data subject to change without notice.

Part # : 1486B48SS	Date : Aug. 25, 2021

Link:www.hammfg.com/1486B48SS