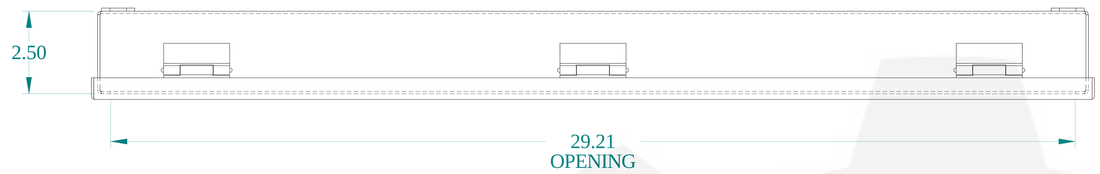

TOP VIEW

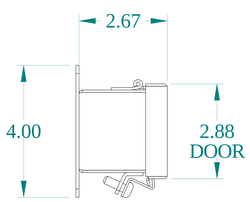

SIDE VIEW

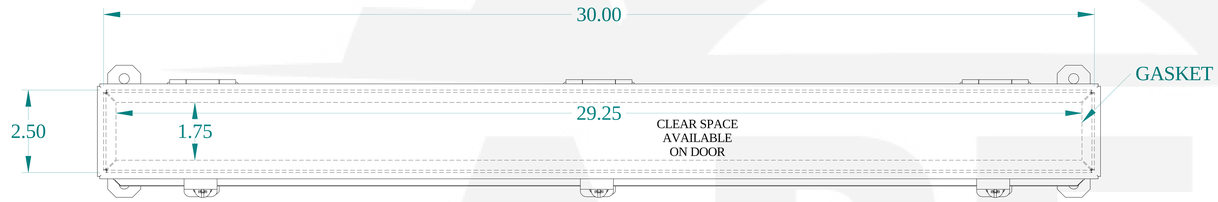

FRONT VIEW

SIDE VIEW

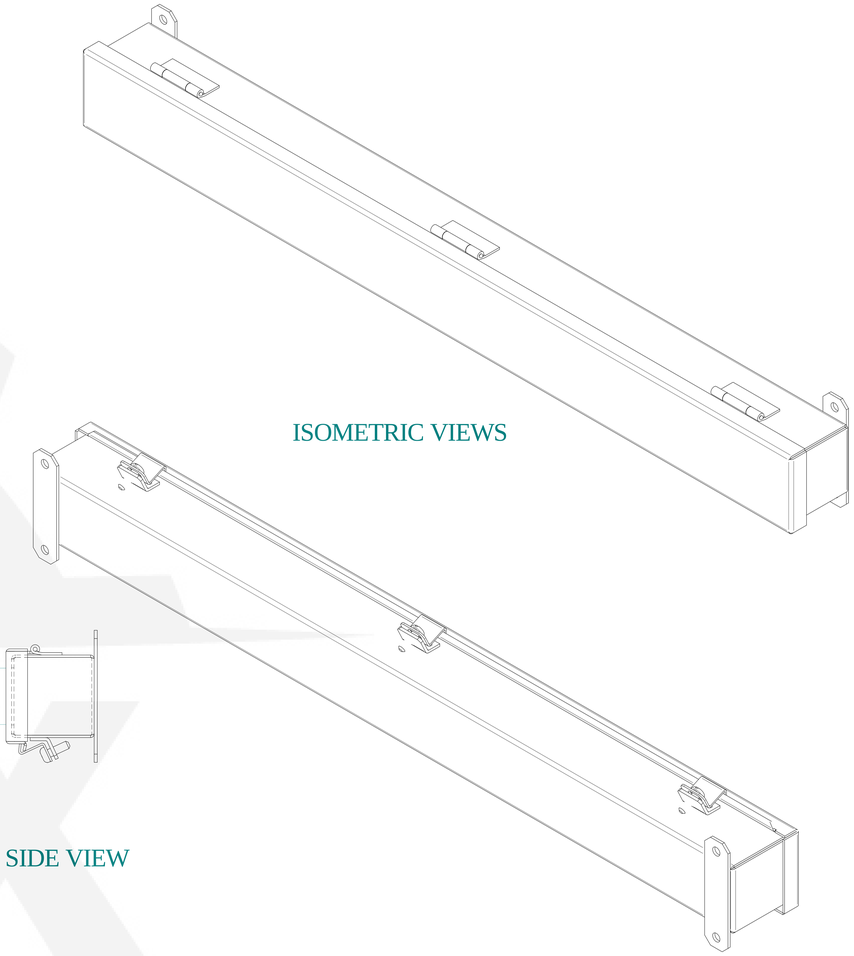

ISOMETRIC VIEWS

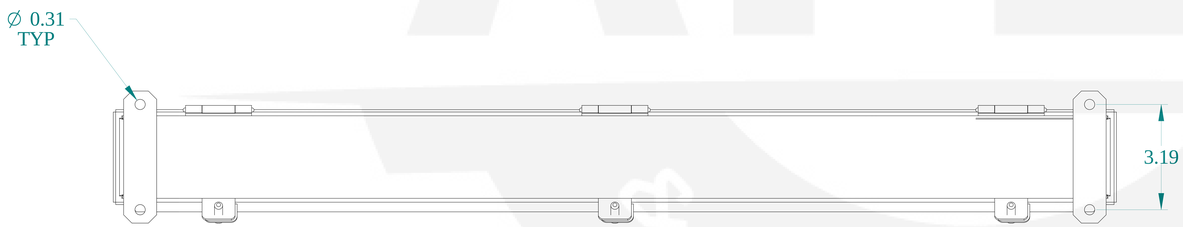

BACK VIEW

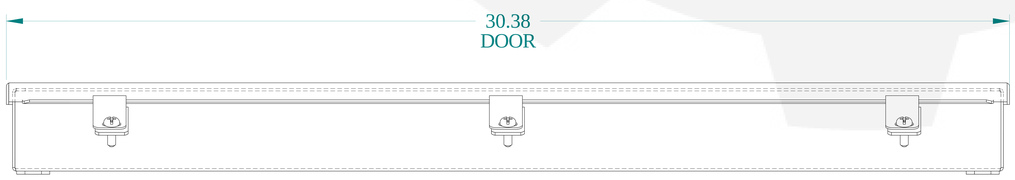

BOTTOM VIEW

HAMMOND MANUFACTURING®

www.hammondmfg.com

Data subject to change without notice.

Part # : 1486B30	Date : Aug. 25, 2021

Link:www.hammfg.com/1486B30