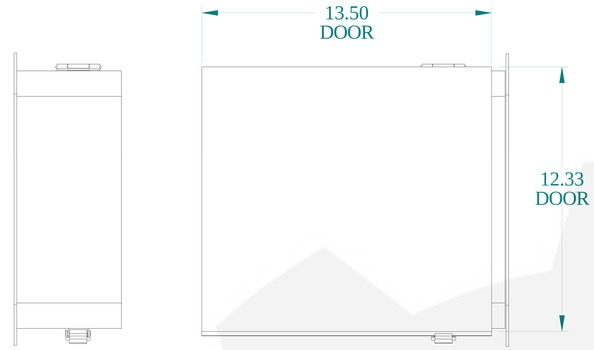


TOP VIEW

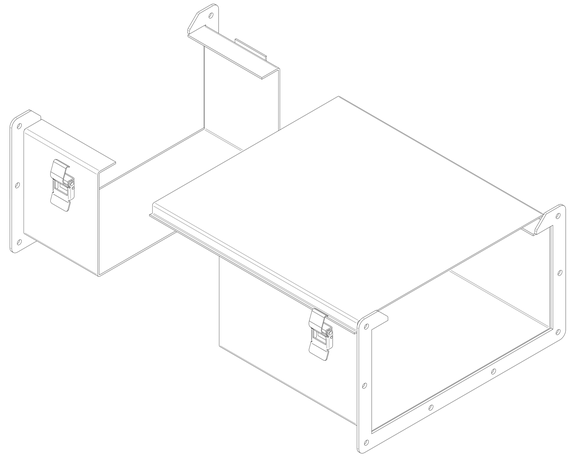

ISOMETRIC VIEWS

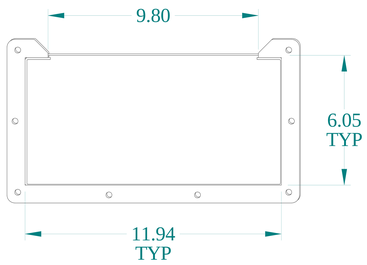


SIDE VIEW

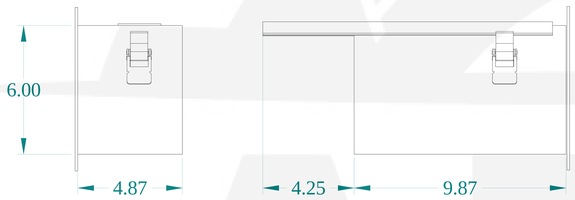


FRONT VIEW

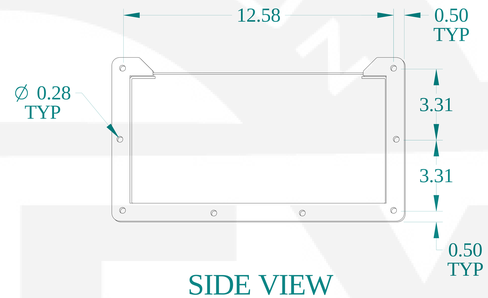


SIDE VIEW

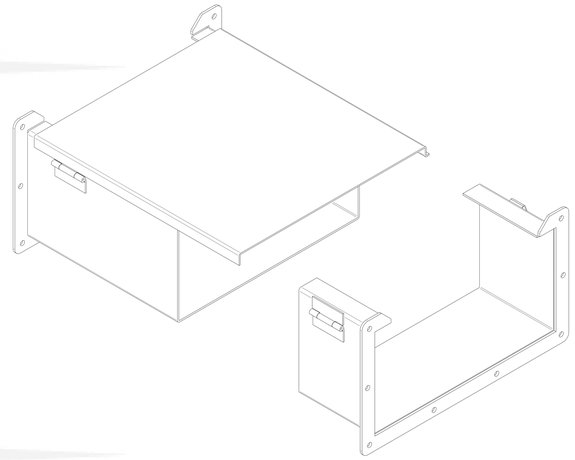

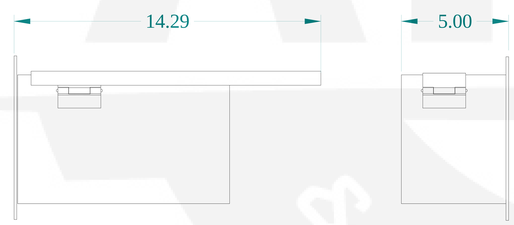


BACK VIEW

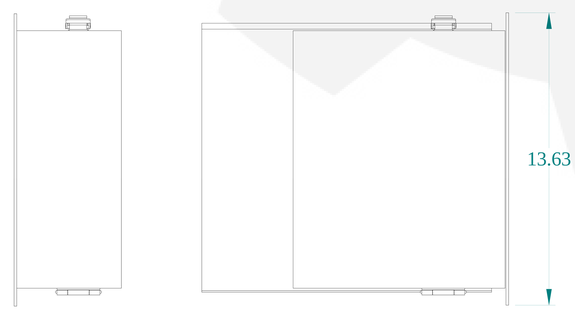


BOTTOM VIEW

HAMMOND MANUFACTURING®

www.hammondmfg.com

Data subject to change without notice.

| | |
|---|---|
| Part # : 1485FW1 | Date : Mar. 22, 2019 |

Link:www.hammfg.com/1485FW1