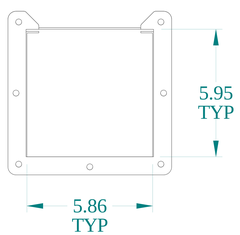

SIDE VIEW

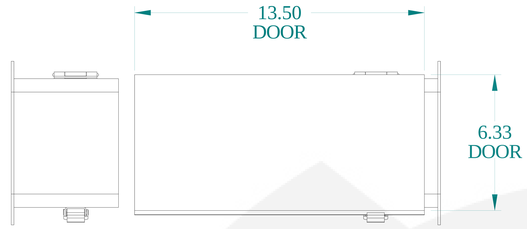

TOP VIEW

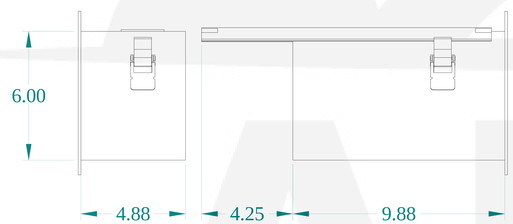

FRONT VIEW

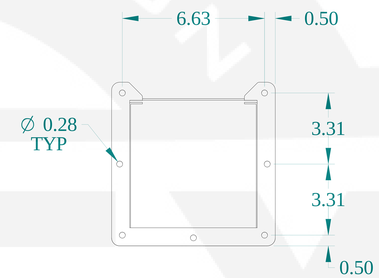

SIDE VIEW

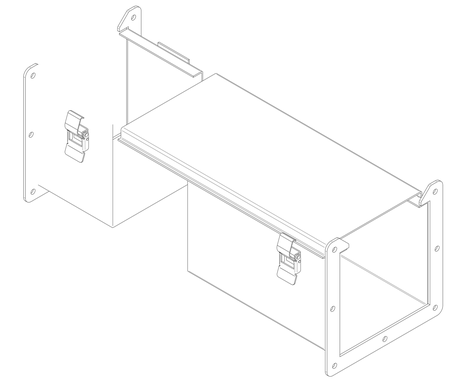

ISOMETRIC VIEWS

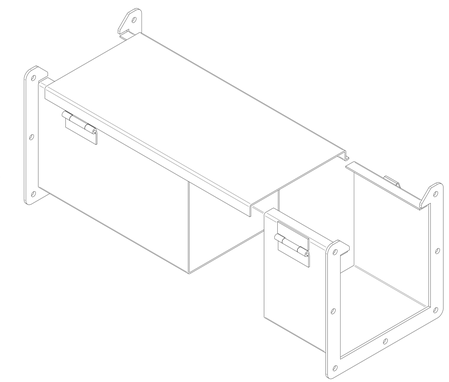

BACK VIEW

BOTTOM VIEW

HAMMOND MANUFACTURING®

www.hammondmfg.com

Data subject to change without notice.

Part # : 1485DW1	Date : Mar. 22, 2019

Link:www.hammfg.com/1485DW1