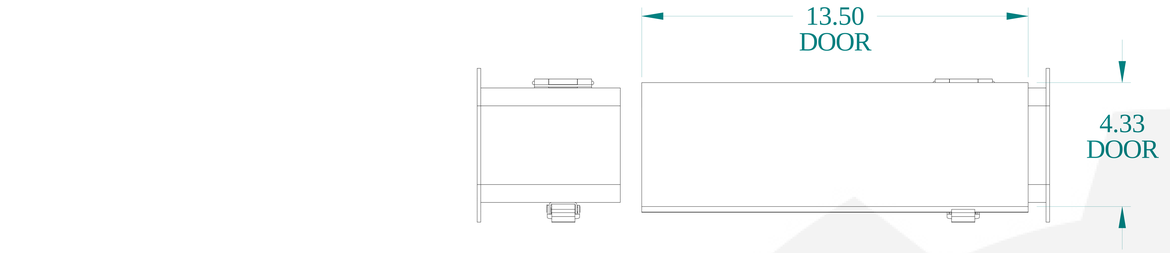

TOP VIEW

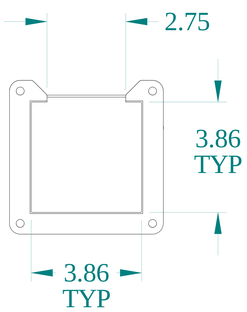

SIDE VIEW

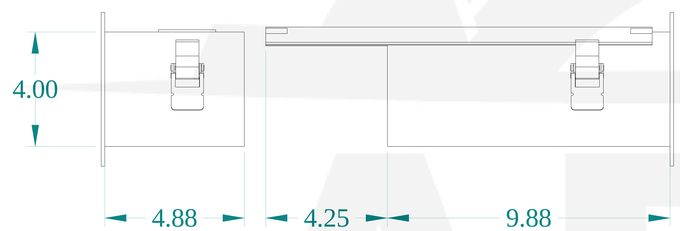

FRONT VIEW

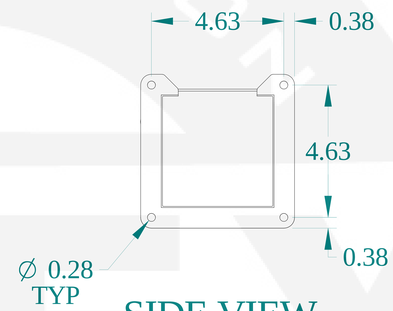

SIDE VIEW

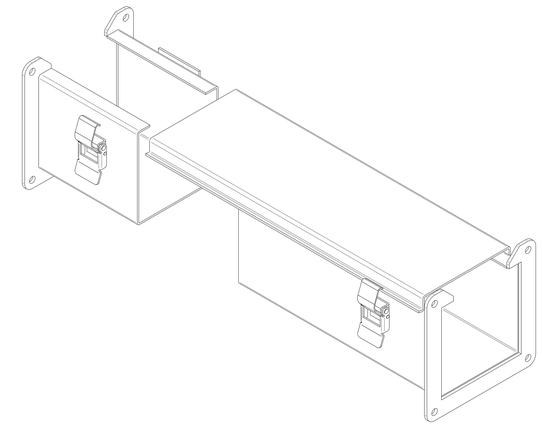

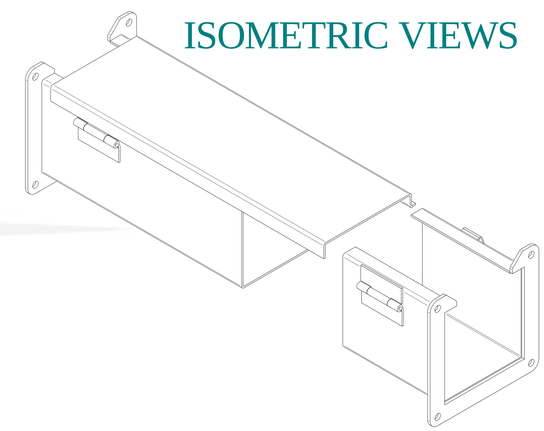

ISOMETRIC VIEWS

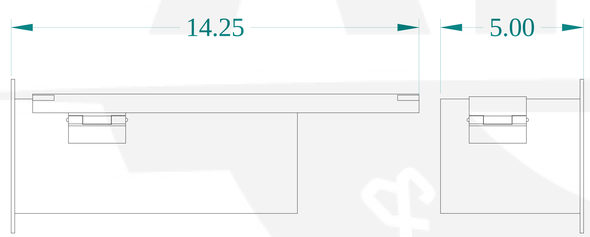

BACK VIEW

BOTTOM VIEW

HAMMOND MANUFACTURING®

www.hammondmfg.com

Data subject to change without notice.

Part # : 1485CW1	Date : Mar. 22, 2019

Link:www.hammfg.com/1485CW1