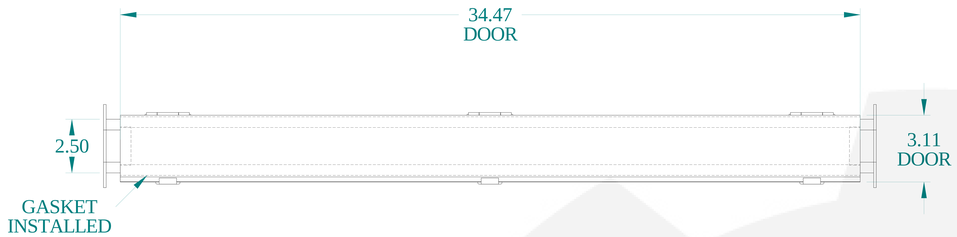

TOP VIEW

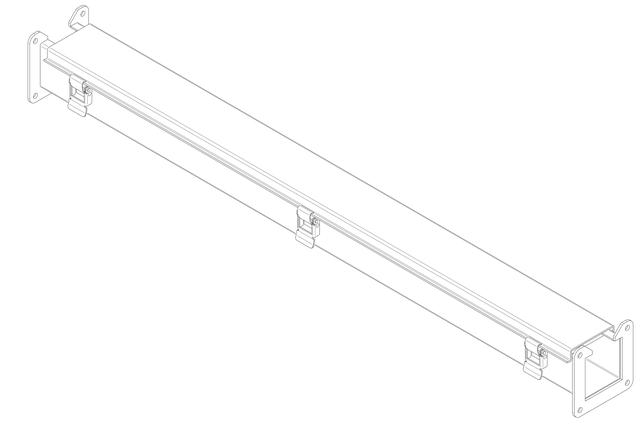

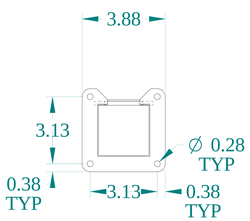

SIDE VIEW

FRONT VIEW

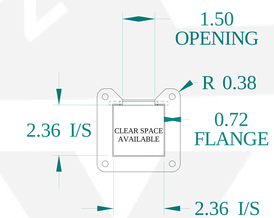

SIDE VIEW

ISOMETRIC VIEWS

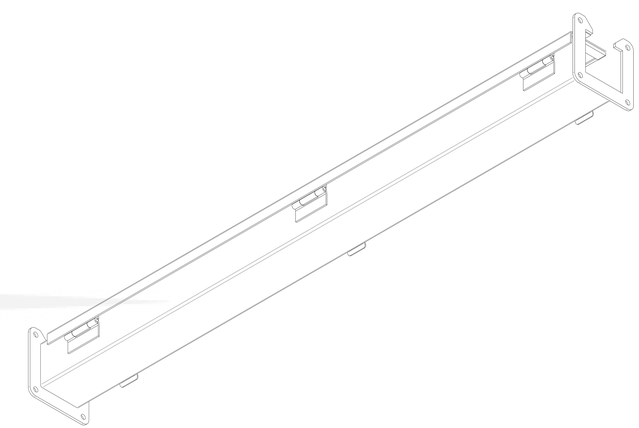

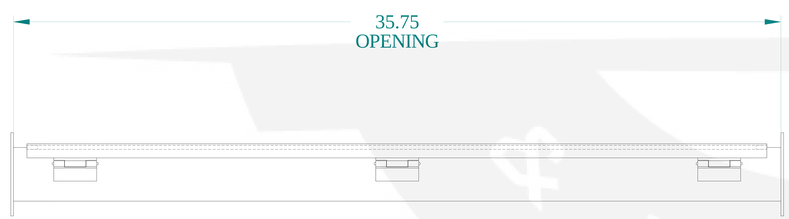

BACK VIEW

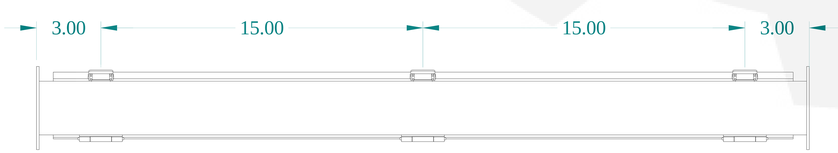

BOTTOM VIEW

HAMMOND MANUFACTURING®

www.hammondmfg.com

Data subject to change without notice.

Part # : 1485B36	Date : Mar. 24, 2019

Link:www.hammfg.com/1485B36