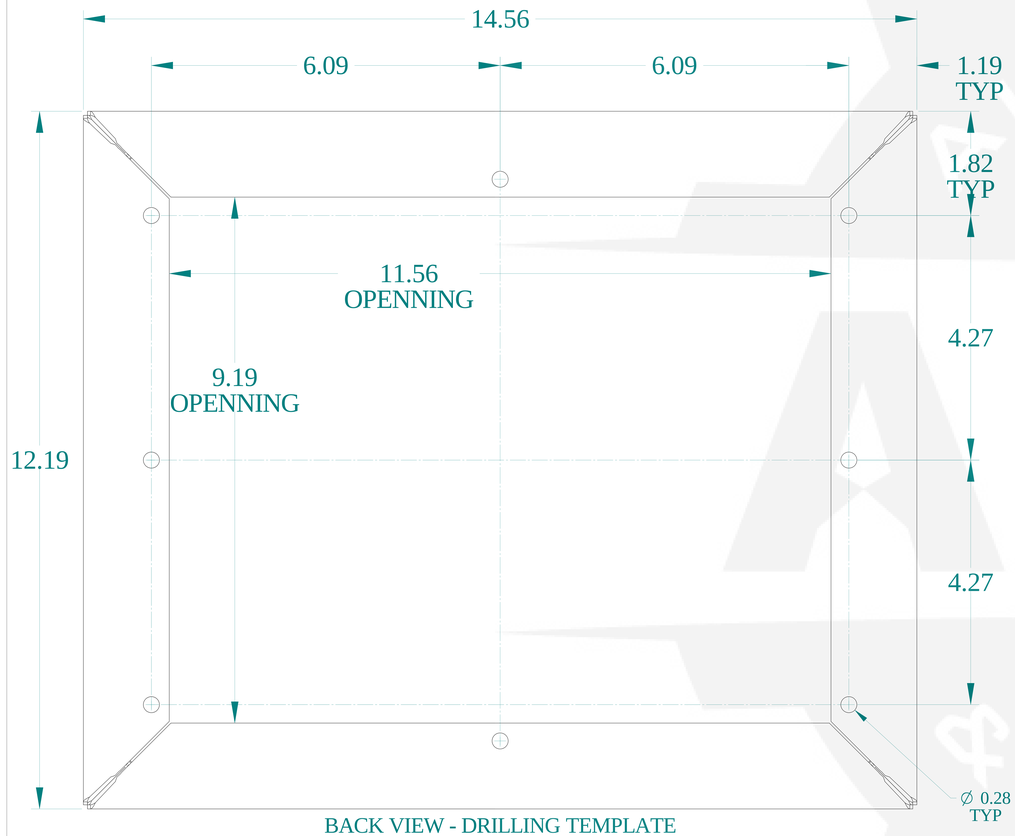

BACK VIEW - DRILLING TEMPLATE
SCALE 2:1

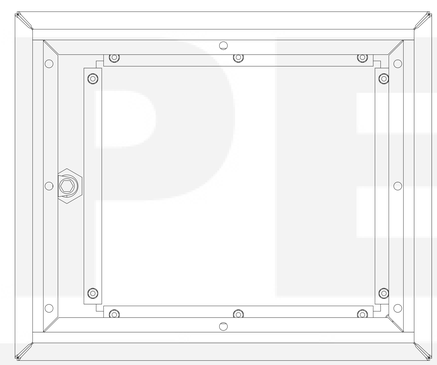

BACK VIEW

SIDE VIEW

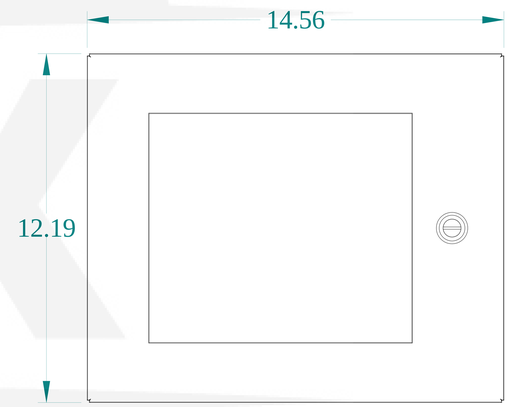

FRONT VIEW

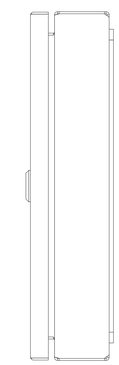

SIDE VIEW

TOP VIEW

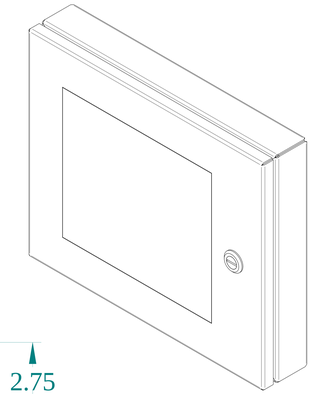

ISOMETRIC VIEW

BOTTOM VIEW

HAMMOND MANUFACTURING®

www.hammondmfg.com

Data subject to change without notice.

Part # : 1481WSSDH1418	Date : Jun. 14, 2022

Link:www.hammfg.com/1481WSSDH1418