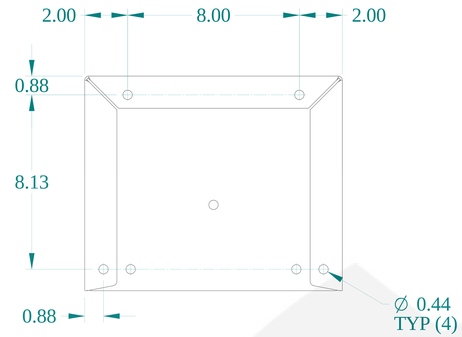

TOP VIEW

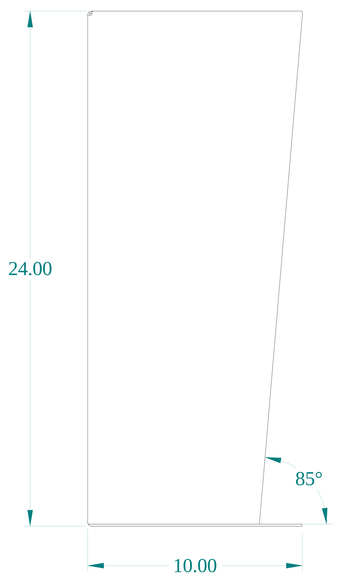

SIDE VIEW

FRONT VIEW

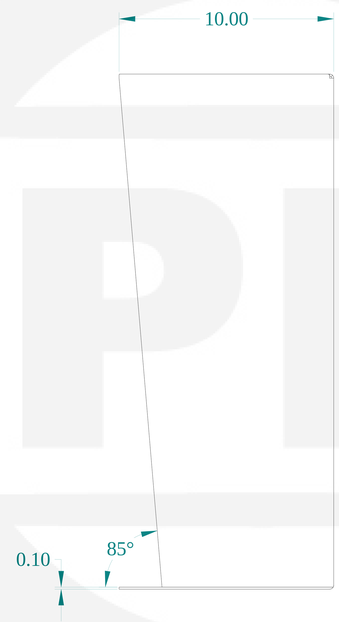

SIDE VIEW

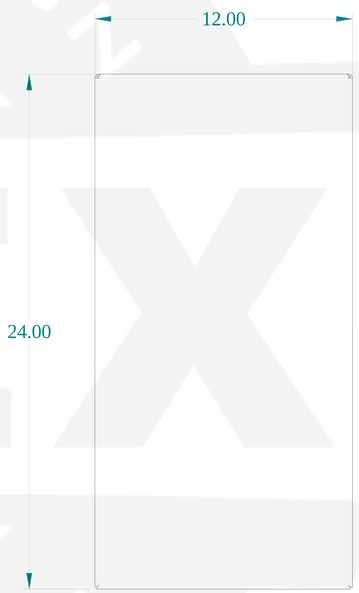

BACK VIEW

ISOMETRIC VIEWS

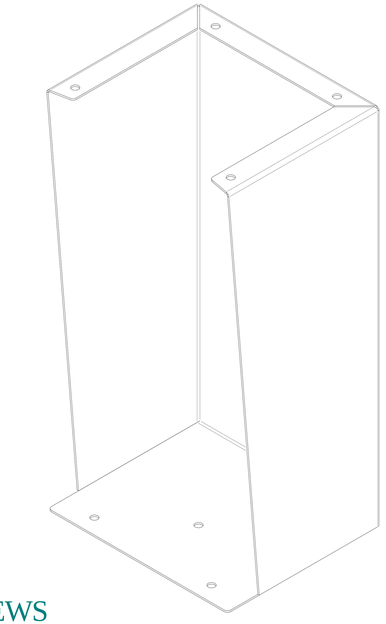

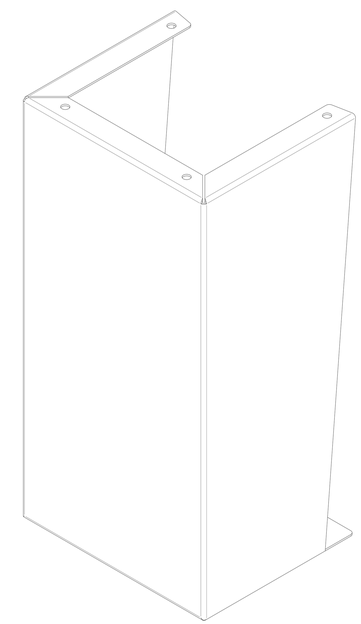

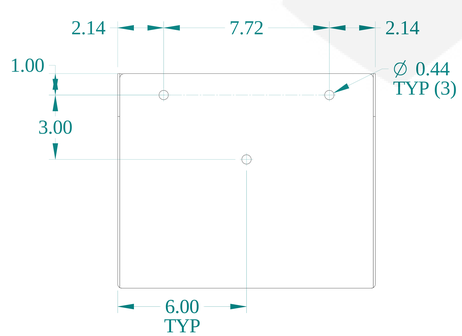

BOTTOM VIEW

HAMMOND MANUFACTURING®

www.hammondmfg.com

Data subject to change without notice.

Part # : 1481FK12K	Date : Aug 17, 2020

Link:www.hammfg.com/1481FK12K