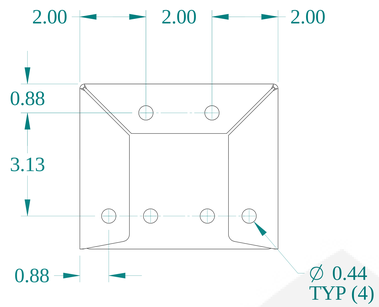

TOP VIEW

SIDE VIEW

FRONT VIEW

SIDE VIEW

BACK VIEW

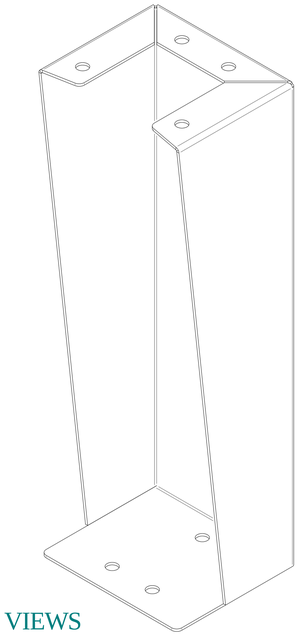

ISOMETRIC VIEWS

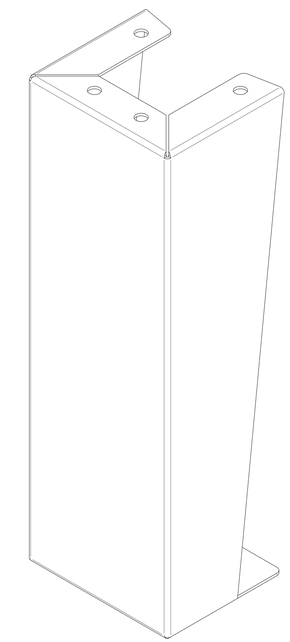

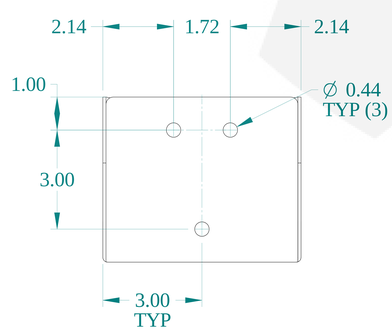

BOTTOM VIEW

HAMMOND MANUFACTURING®

www.hammondmfg.com

Data subject to change without notice.

Part # : 1481FG6K	Date : Aug 17, 2020

Link:www.hammfg.com/1481FG6K