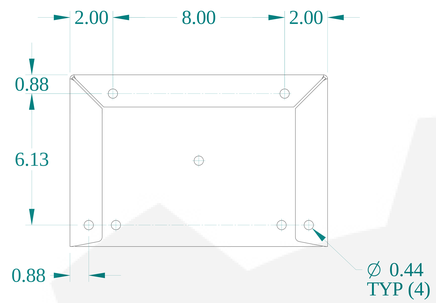


TOP VIEW

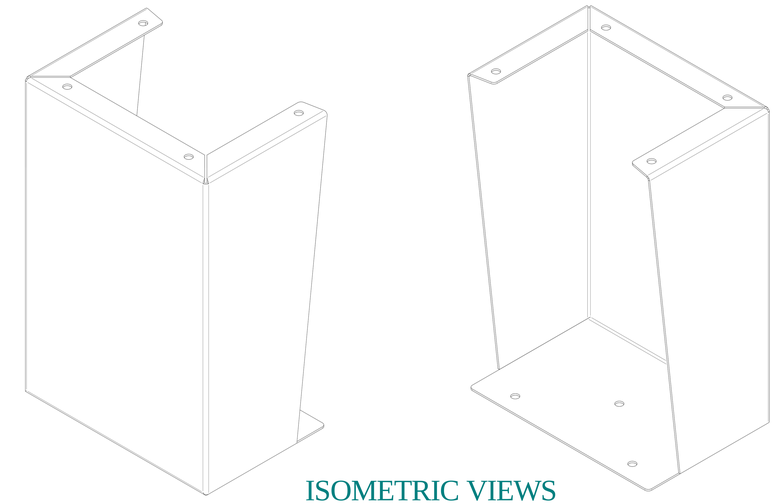

ISOMETRIC VIEWS

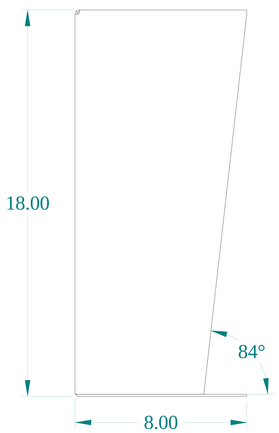


SIDE VIEW

FRONT VIEW

SIDE VIEW

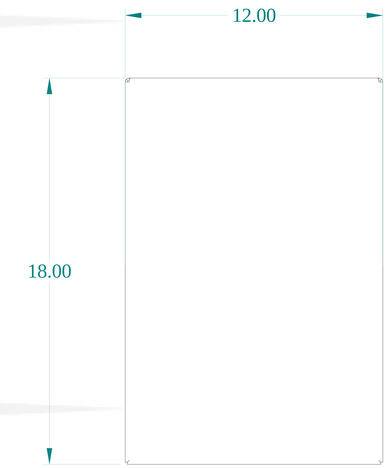


BACK VIEW

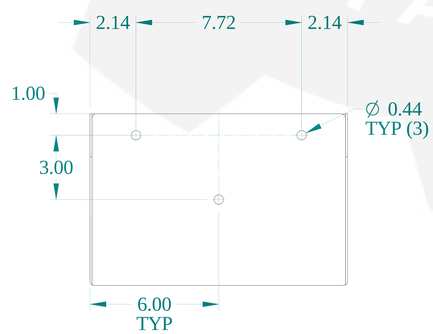


BOTTOM VIEW

HAMMOND MANUFACTURING®

www.hammondmfg.com

Data subject to change without notice.

| | |
|---|---|
| Part # : 1481FG12K | Date : Aug 17, 2020 |

Link:www.hammfg.com/1481FG12K