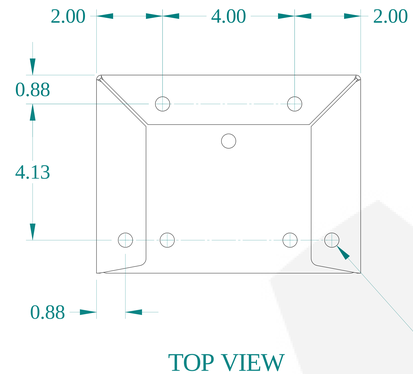

TOP VIEW

SIDE VIEW

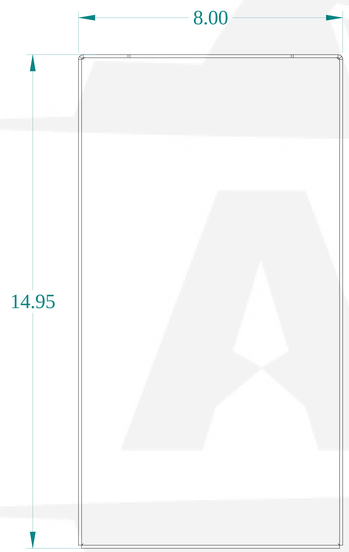

FRONT VIEW

SIDE VIEW

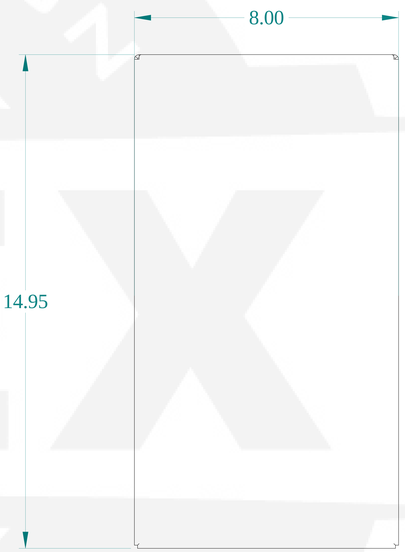

BACK VIEW

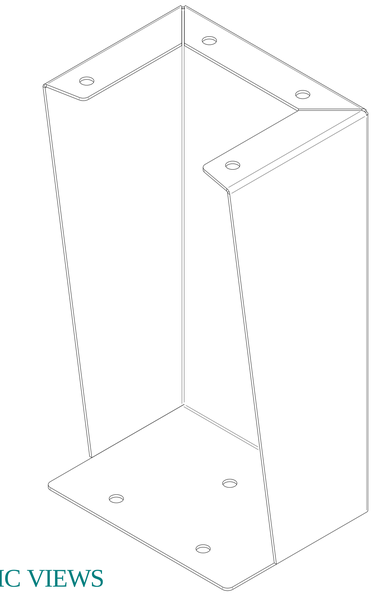

ISOMETRIC VIEWS

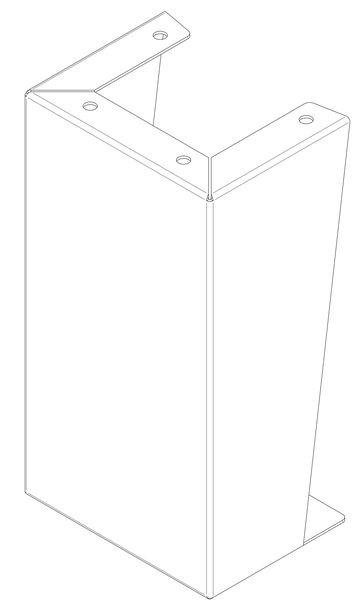

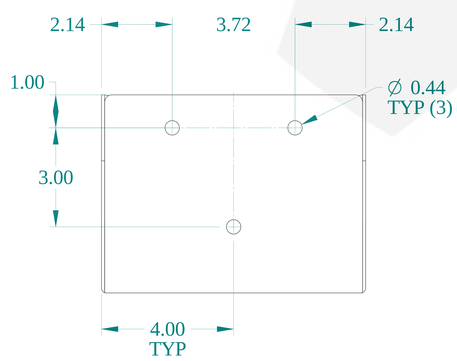

BOTTOM VIEW

HAMMOND MANUFACTURING®

www.hammondmfg.com

Data subject to change without notice.

Part # : 1481FE8K	Date : Aug 17, 2020

Link:www.hammfg.com/1481FE8K