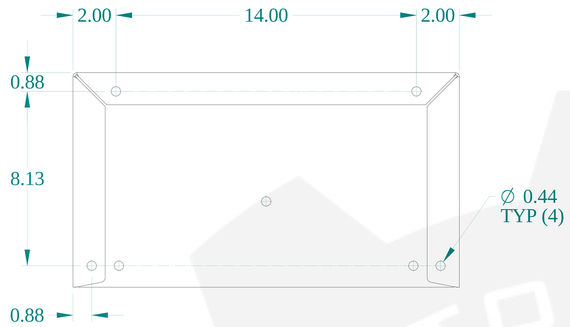

TOP VIEW

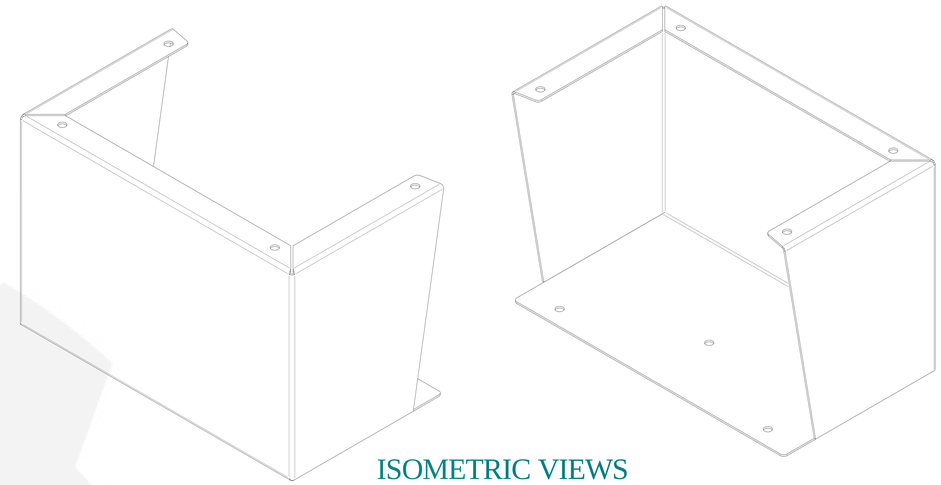

ISOMETRIC VIEWS

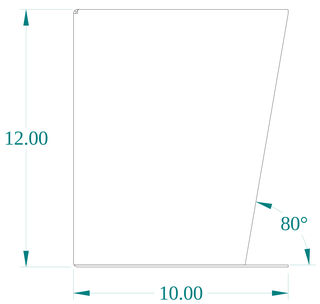

SIDE VIEW

FRONT VIEW

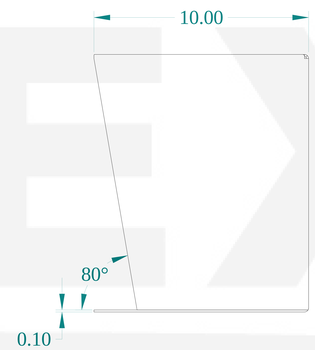

SIDE VIEW

BACK VIEW

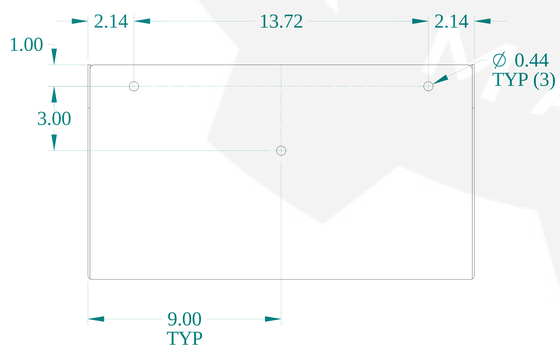

BOTTOM VIEW

HAMMOND MANUFACTURING®

www.hammondmfg.com

Data subject to change without notice.

Part # : 1481FC18KSS	Date : Aug 17, 2020

Link:www.hammfg.com/1481FC18KSS