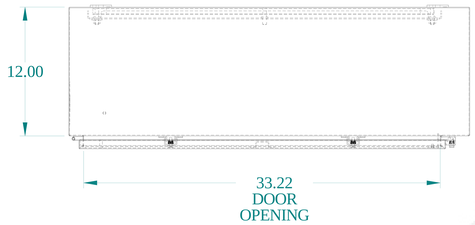


TOP VIEW

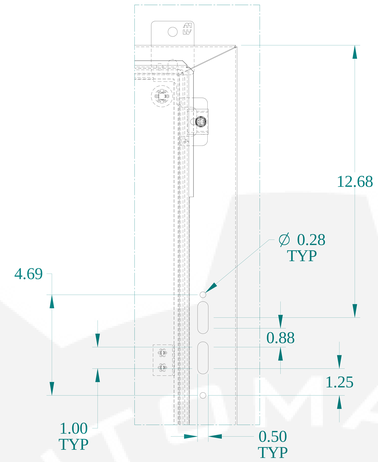


DETAIL Z

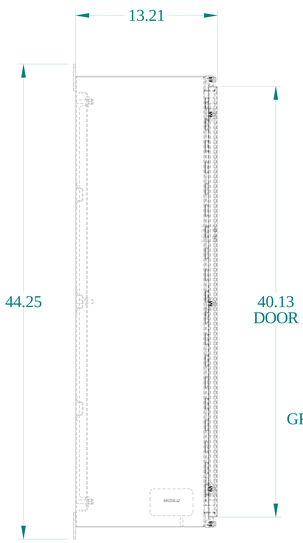


SIDE VIEW

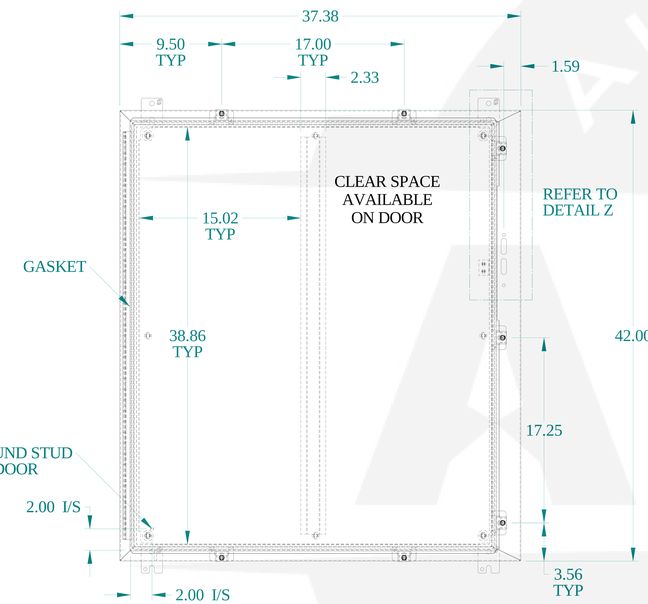


FRONT VIEW

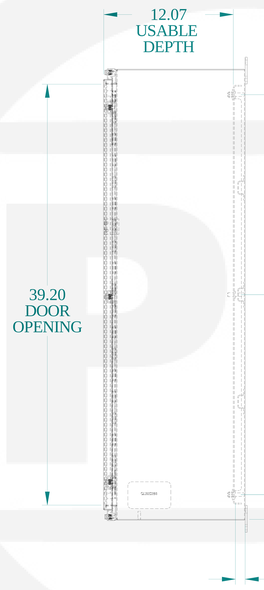


SIDE VIEW

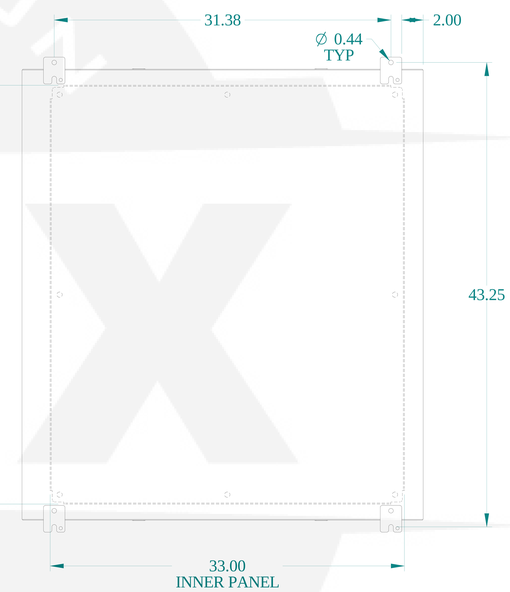


BACK VIEW

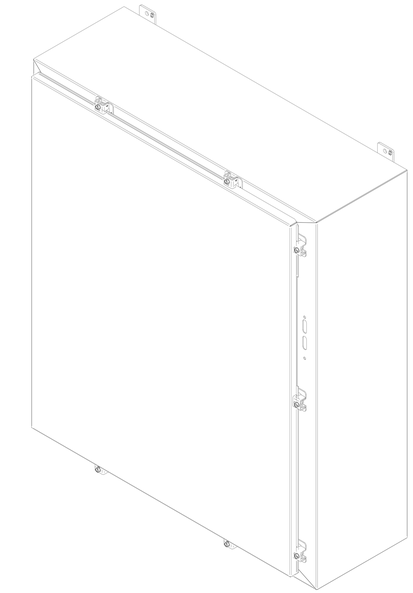

ISOMETRIC VIEWS

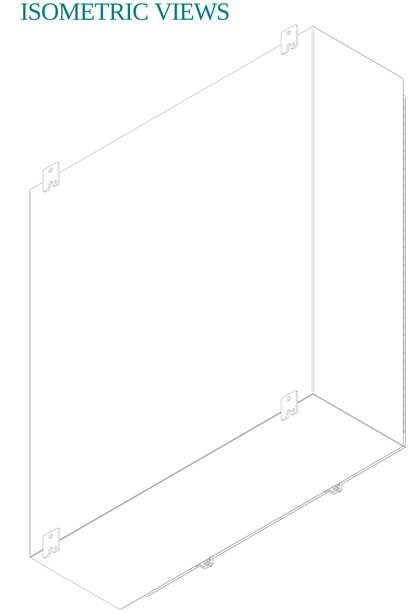

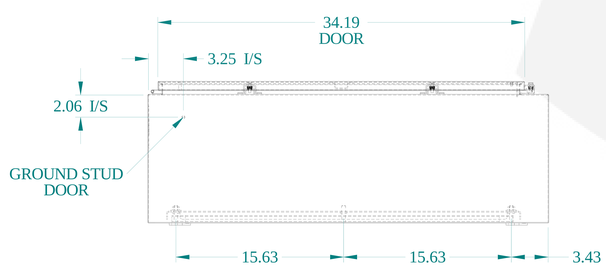


BOTTOM VIEW

HAMMOND MANUFACTURING®

www.hammondmfg.com

Data subject to change without notice.

| | |
|---|---|
| Part # : 1447SN4J12 | Date : Jan. 25, 2022 |

Link:www.hammfg.com/1447SN4J12