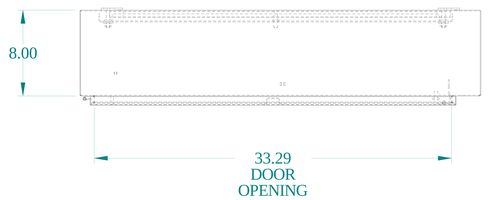

TOP VIEW

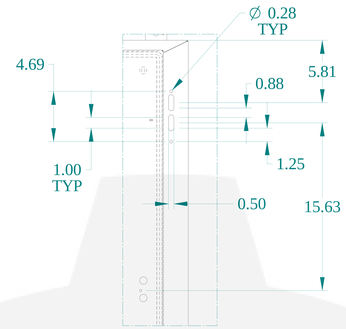

DETAIL" Z"

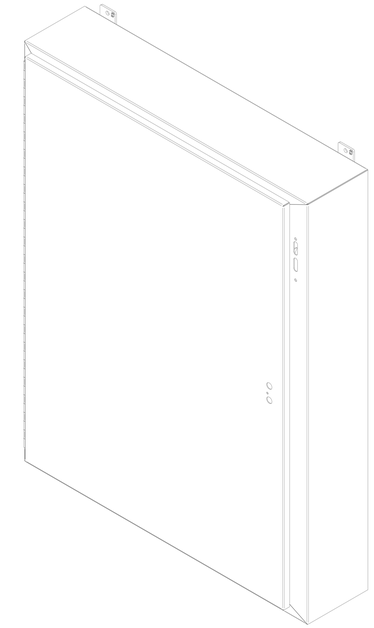

ISOMETRIC VIEWS

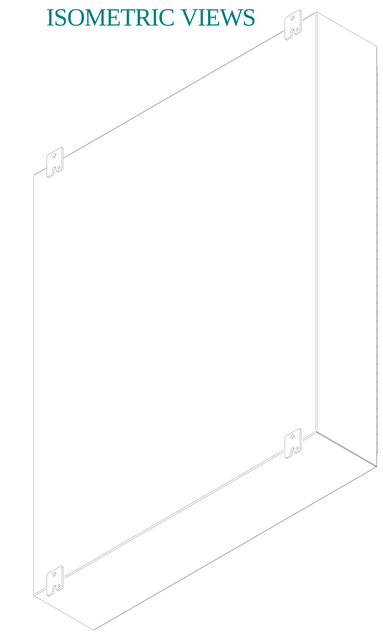

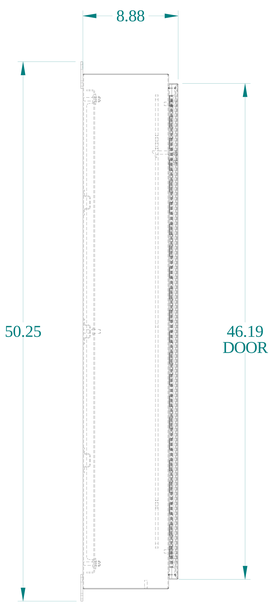

SIDE VIEW

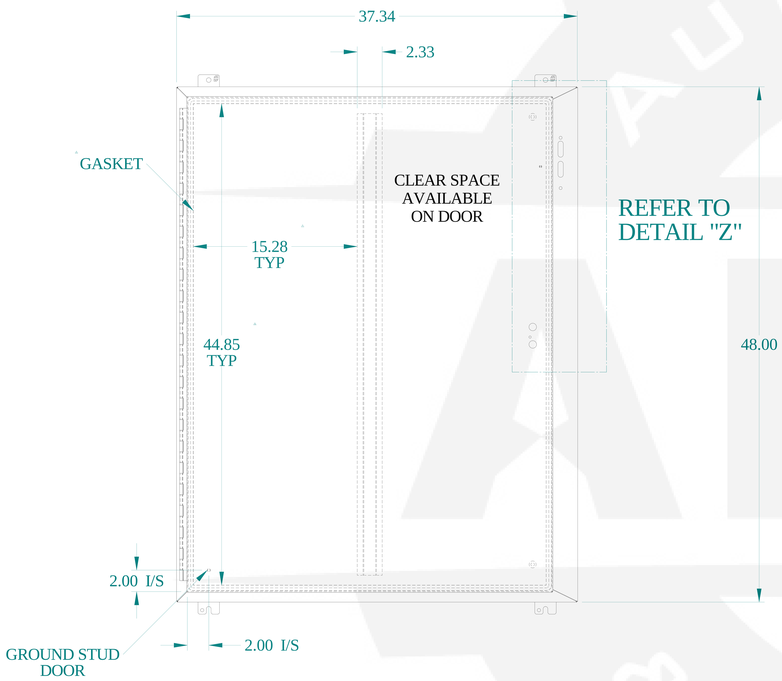

FRONT VIEW

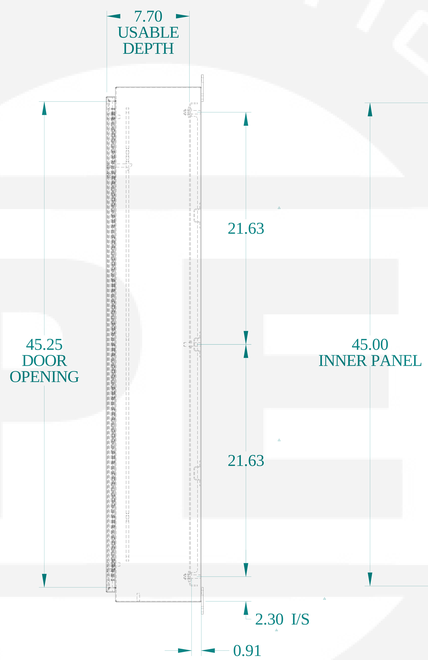

SIDE VIEW

BACK VIEW

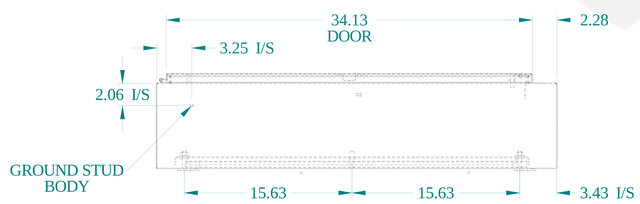

BOTTOM VIEW

HAMMOND MANUFACTURING®

www.hammondmfg.com

Data subject to change without notice.

Part # : 1447SK8	Date : Dec. 7, 2021

Link:www.hammfg.com/1447SK8