TOP VIEW

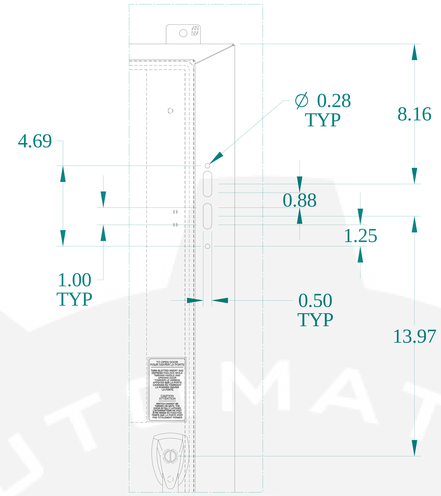


DETAIL Z

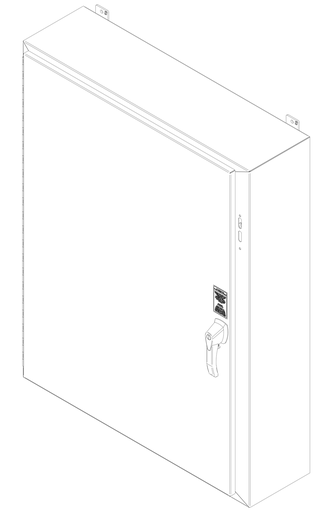

ISOMETRIC VIEWS

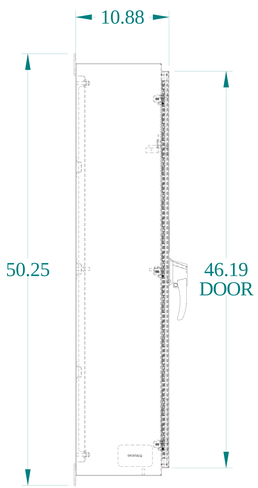


SIDE VIEW

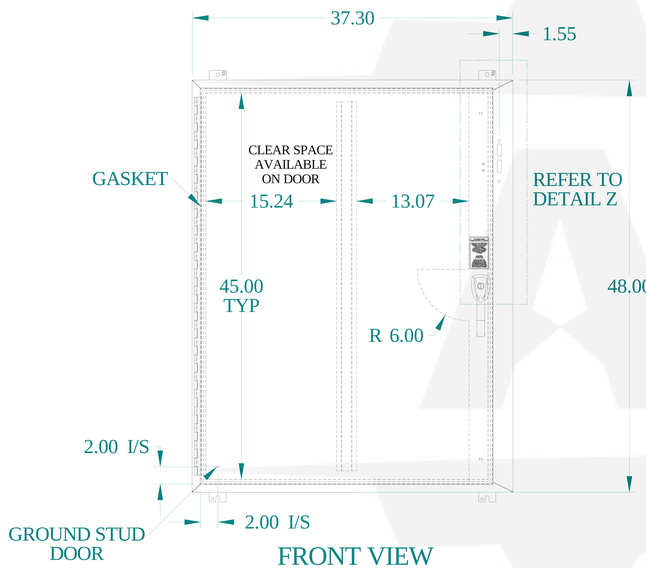


FRONT VIEW

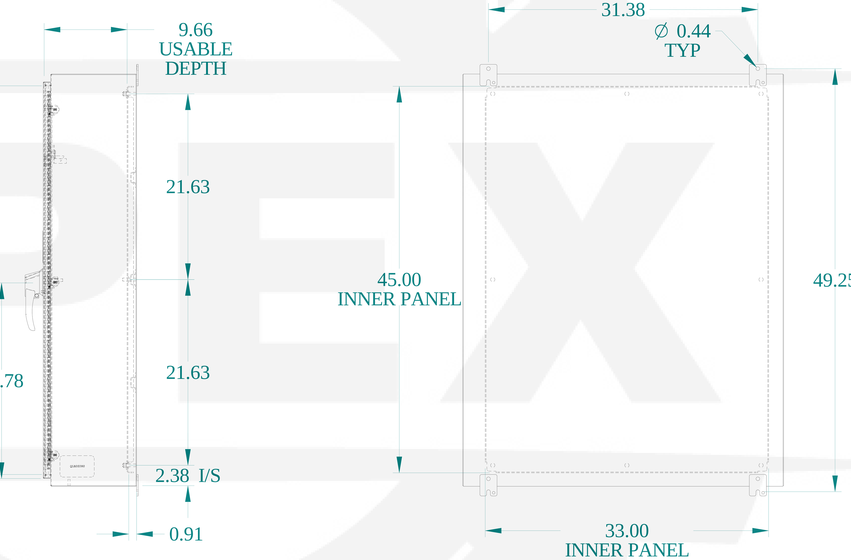


SIDE VIEW

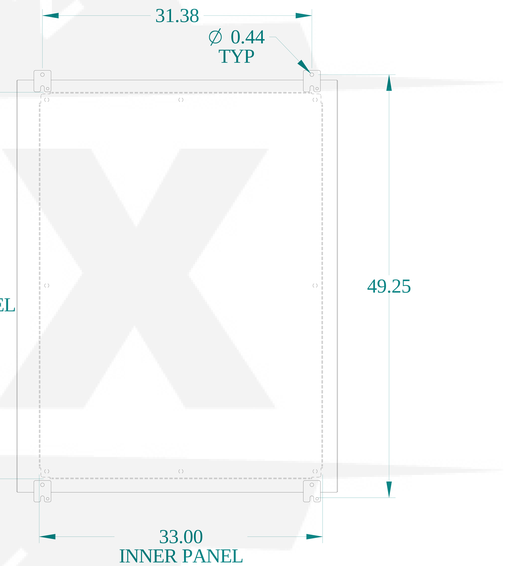


BACK VIEW

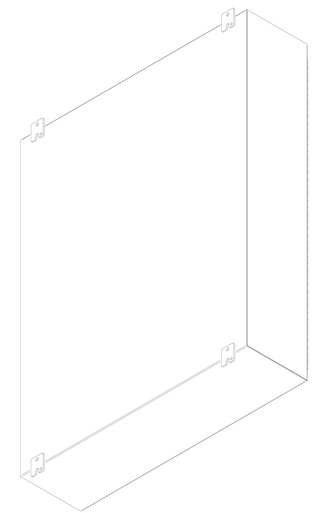

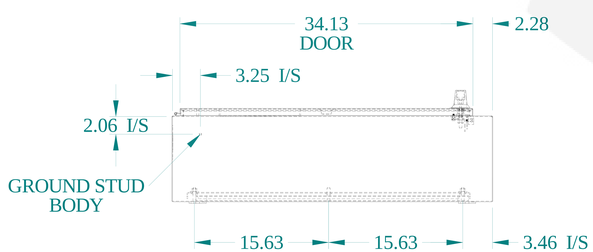


BOTTOM VIEW

HAMMOND MANUFACTURING®

www.hammondmfg.com

Data subject to change without notice.

| | |
|---|---|
| Part # : 1447SK10HK | Date : Jan. 30, 2022 |

Link:www.hammfg.com/1447SK10HK