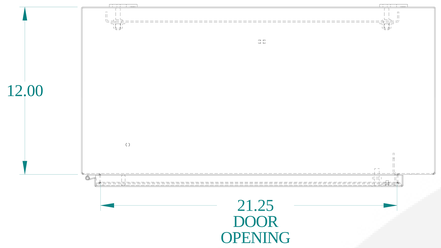

TOP VIEW

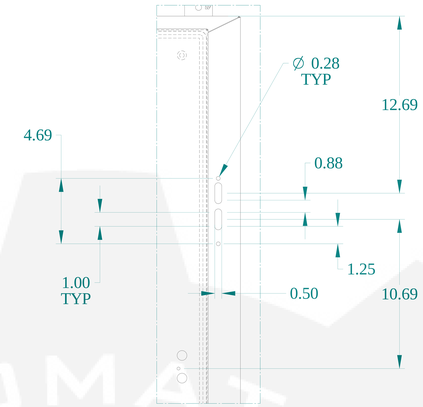

DETAIL" Z"

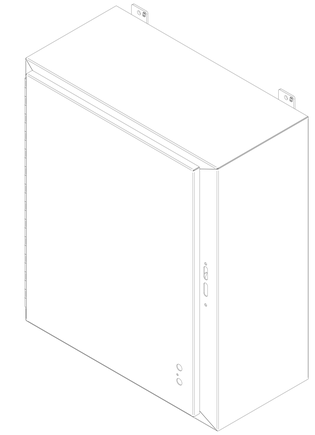

ISOMETRIC VIEWS

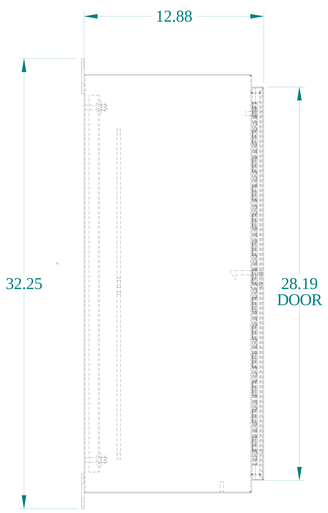

SIDE VIEW

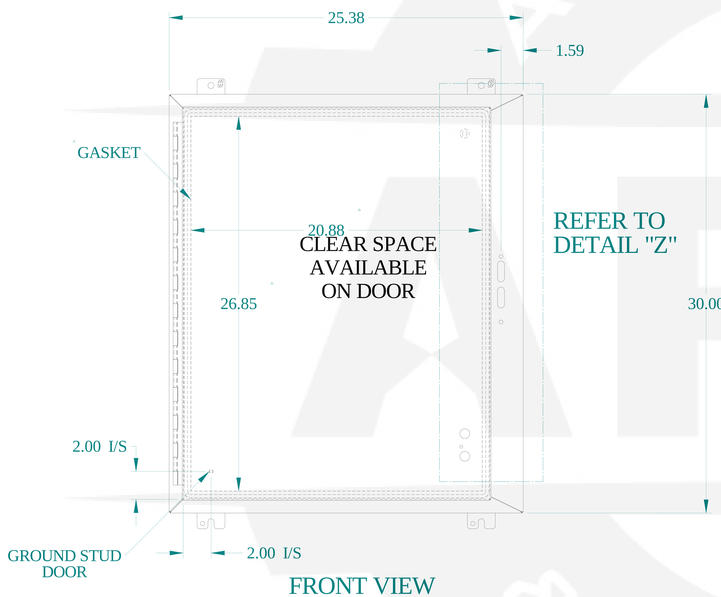

FRONT VIEW

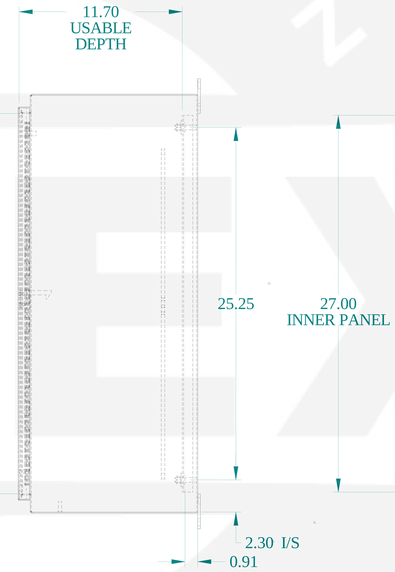

SIDE VIEW

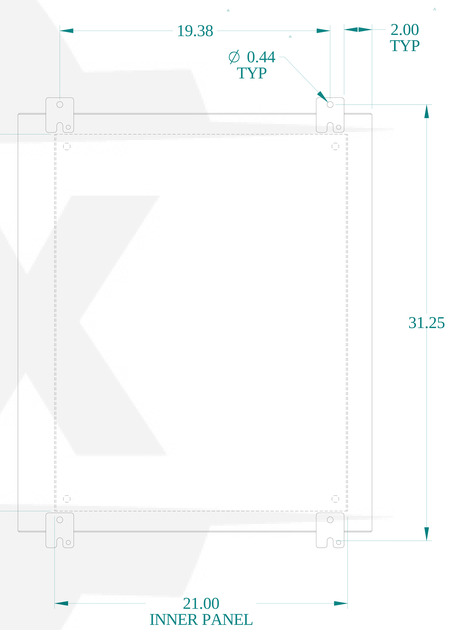

BACK VIEW

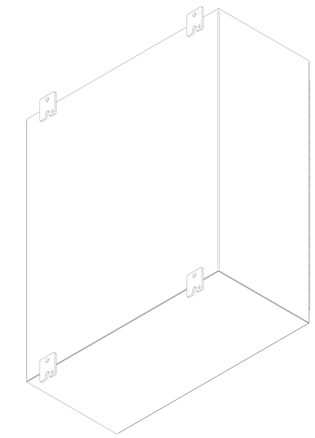

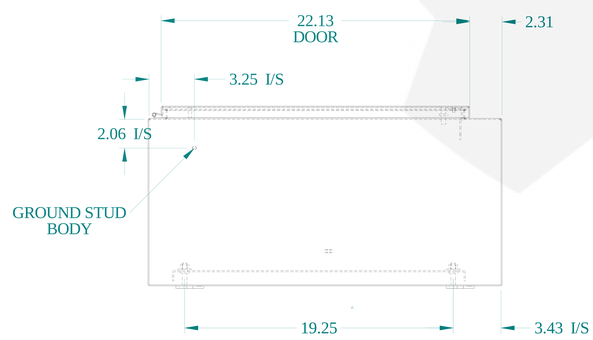

BOTTOM VIEW

HAMMOND MANUFACTURING®

www.hammondmfg.com

Data subject to change without notice.

Part # : 1447SE12	Date : Dec. 3, 2021

Link:www.hammfg.com/1447SE12