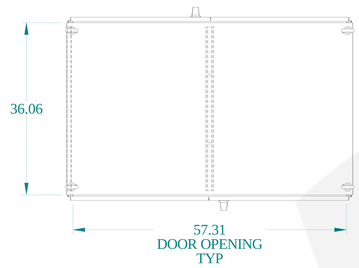


TOP VIEW

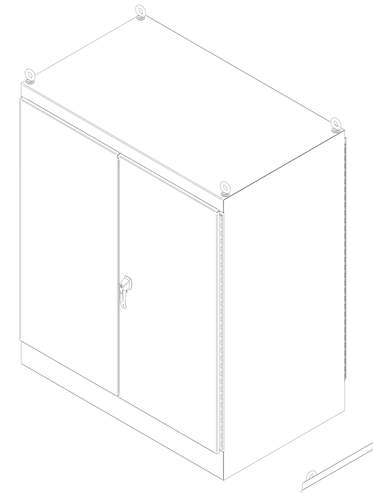

ISOMETRIC VIEWS

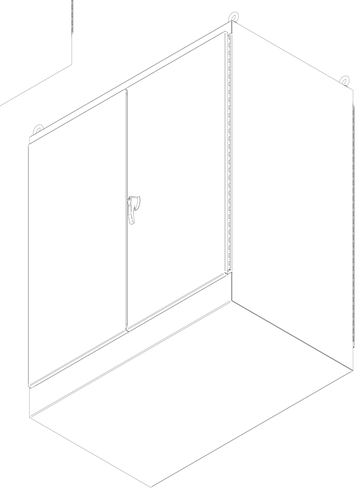

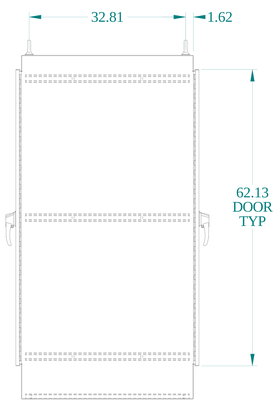


SIDE DOOR

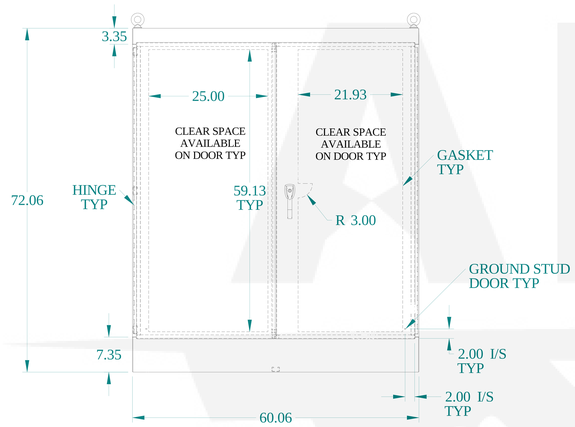


FRONT VIEW

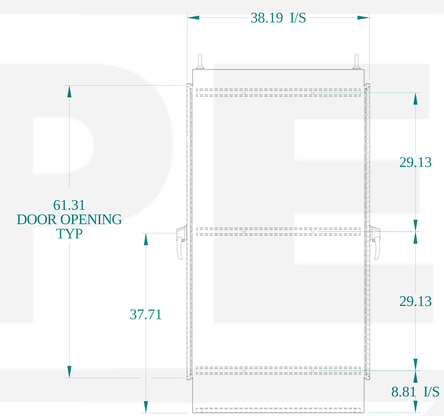


SIDE DOOR

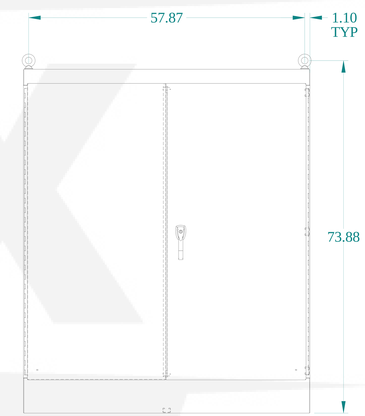


BACK VIEW

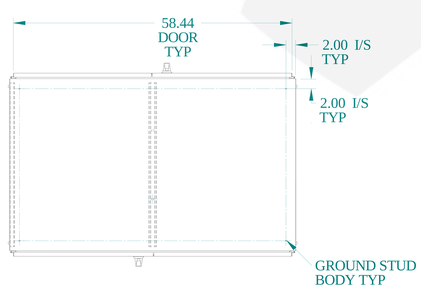


BOTTOM VIEW

HAMMOND MANUFACTURING®

www.hammondmfg.com

Data subject to change without notice.

| | |
|---|---|
| Part # : 1418ZXD36 | Date : Mar. 24, 2019 |

Link:www.hammfg.com/1418ZXD36