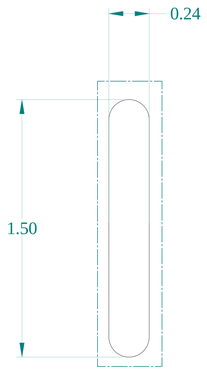


DETAIL Z
TYP

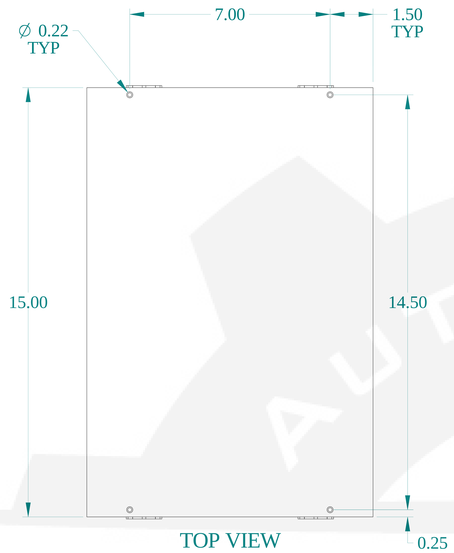


TOP VIEW

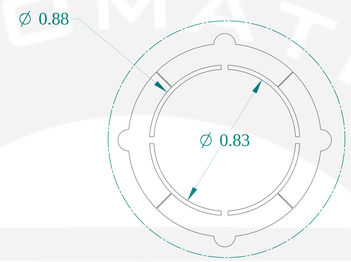


DETAIL Y
TYP

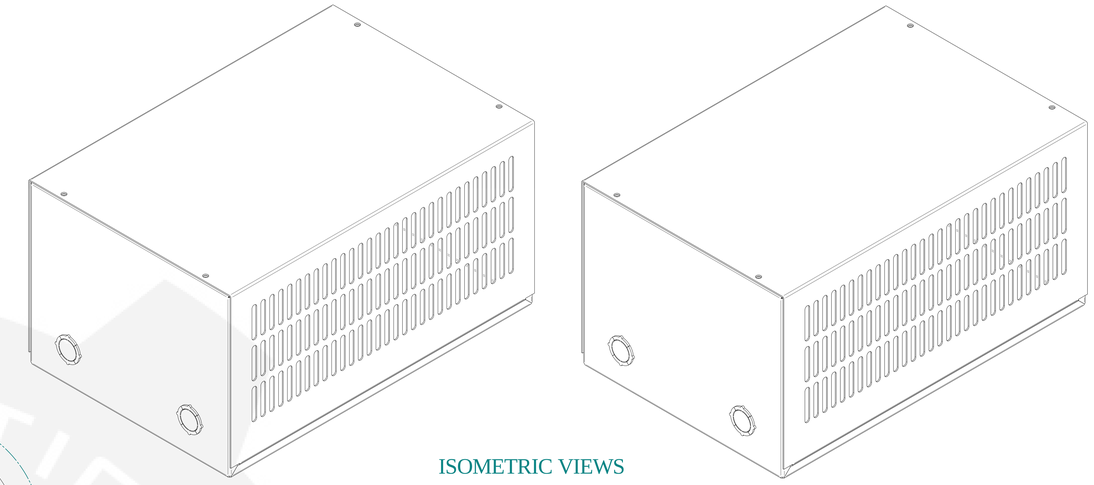

ISOMETRIC VIEWS

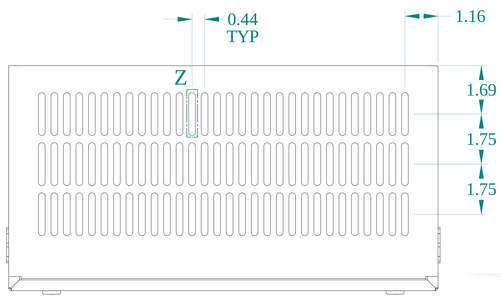


SIDE VIEW

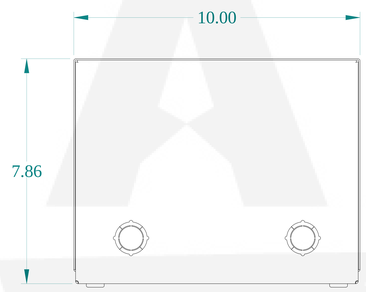


FRONT VIEW

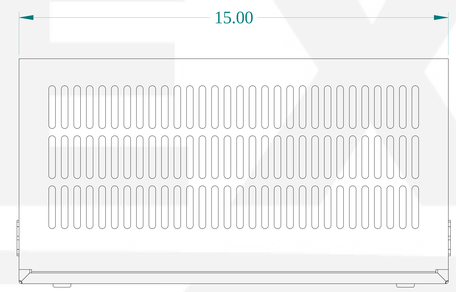


SIDE VIEW

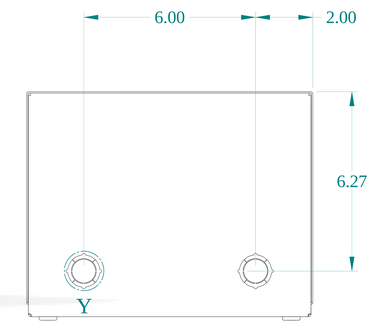


BACK VIEW

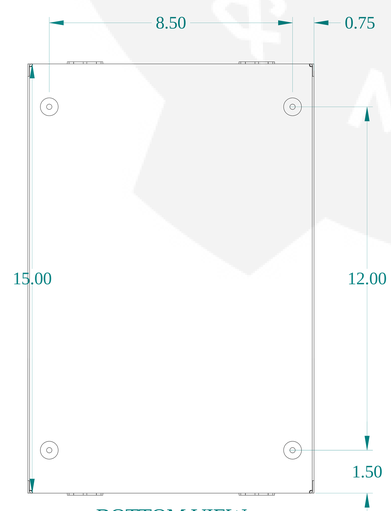


BOTTOM VIEW

HAMMOND MANUFACTURING®

www.hammondmfg.com

Data subject to change without notice.

| | |
|---|---|
| Part # : 1416O | Date : Mar. 24, 2019 |

Link:www.hammfg.com/1416O