Model(s) ZG6915

AquaSense® 4 in. Base Sensor Faucet With Gear-driven Ceramic Cartridge

TAG

ARCHITECTURAL/ENGINEERING SPECIFICATION:

Zurn AquaSense Sensor Faucets create a more hygienic, sustainable, and reliable restroom experience by utilizing gear-driven ceramic cartridge operation with no solenoids to replace and renewable hydropower. The standard high-efficiency, 0.5 gpm low-flow rate and adjustable timeout feature help save water to meet sustainability goals. Customize usage settings wirelessly by using Zurn Elkay's Bluetooth app, PlumbPro. Upgrade to the smart device version for fleet management, including real-time data. Zurn Lead Free products are durable, high quality brass faucets and fixtures that are designed and manufactured to comply with Section 1417 of the Safe Drinking Water Act (SDWA) which mandates the weighted average lead content of no more than 0.25% of the wetted surface.



PRODUCT FEATURES:

- Uses EZ Gear technology, a motor gear-driven ceramic cartridge that is less susceptible to debris and buildup for easy maintenance; outlasts and outperforms solenoids
- Hydro X Power technology delivers sustainable performance by providing renewable, uninterrupted hydropower designed to last the life of a commercial restroom.
- Intuitive and effortless, no-delay touchless sensor water activation
- Bluetooth-enabled for point-of-use wireless adjustability: Adjustable Time Out Feature (30-second default time out), Hygienic Line Flushing (on-demand or programmed), Sensing modes (on-demand or metering), Sensor Range Adjustment and Battery Status
- plumbSMART connected option available with suffix -W2 for remote monitoring and real-time usage insights to your connected plumbing ecosystem
- Shipped standard with high-efficiency water flow rates of 0.5 GPM; other flow rates available
- Quiet water flow and soft-close technology that eliminates water hammer
- Polished chrome standard finish, brushed nickel and matte black available

SUFFIX OPTIONS:

-ADM	Above-Deck Mixer
-MV	Temperature Mixing Valve
-SH	Three Supply Hoses for Mixing Valve
-SSH	Single Supply Hose
-TMV-1	Thermostatic Mixing Valve for Single Faucets (ASSE Listed 1070)

POWER OPTIONS:

	Power Supply Option
-ACA	Plug-in Power Converter with Battery Backup
-Standard	Sustainable Hydropower with Battery Backup (6 AA)
-CWB	Connector Wire for Hardwire Power Converter

PRODUCT COMPLIANCE:

ADA
ASME A112.18.1/CSA B125.1
CEC
CSA B125.1
IPC
NSF 372
NSF 61
WaterSense

*Complies with ADA & ICC A117.1 accessibility requirements when installed according to the requirements outlined in these standards.

*This product should be used with a WaterSense labeled counterpart with a compatible flow volume to ensure that the entire system meets the requirements for water efficiency and performance.

*Although products with certain combinations of options and features will meet or comply with these standards and/or certifications, not every combination of options and features will result in such compliance. If you have any questions about your particular product, please contact our Customer Care Dept. at 1-855-ONE-ZURN (United States) or 1-877-892-5216 (Canada) for confirmation.

DOCUMENTATION LINKS:

Maintenance Use and Care - Care and Cleaning (pdf) - FV846.pdf
Installation Guide - Installation Intructions (pdf) - ZG6915
Warranty - Warranty (pdf) - ZG6915

FLOW OPTIONS:

	Suffix	Flow GPM [L]	Vandal-Resistant	WaterSense*	Outlet Type
	-Standard	0.5 GPM [1.9L]	x		Spray
	-E	1.5 GPM [5.7L]	x	x	Aerator
	-J	1.5 GPM [5.7L]	x	x	Laminar
	-K	1.0 GPM [3.8L]	x	x	Laminar
	-L	1.0 GPM [3.8L]	x	x	Aerator
	-M	0.35 GPM [1.3L]	x		Spray
	-N	0.5 GPM [1.9L]	x		Laminar

by Zurn Elkay Water Solutions
5000 Elwin Buchanan Drive, Sanford, NC 27330
3544 Nashua Drive, Mississauga, Ontario L4V1L2
ZURN.COM US 1.855.ONE.ZURN CANADA 1.877.892.5216
zurn.com/patents

© 2026

ROUGH-IN / INSTALLATION DRAWING

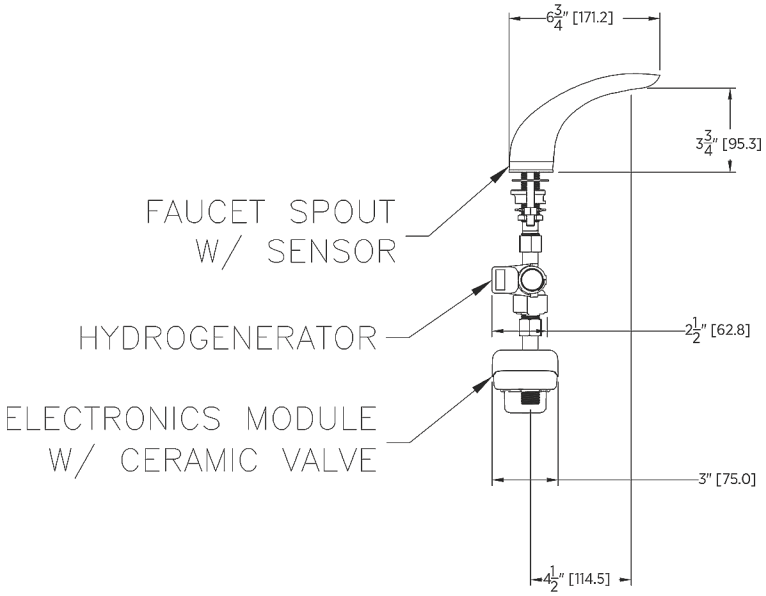

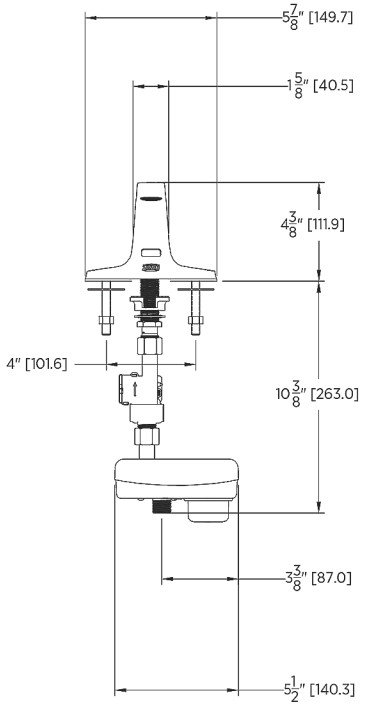

by Zurn Elkay Water Solutions
5000 Elwin Buchanan Drive, Sanford, NC 27330
3544 Nashua Drive, Mississauga, Ontario L4V1L2
ZURN.COM US 1.855.ONE.ZURN CANADA 1.877.892.5216
zurn.com/patents

© 2026