AquaSense® Series

ZG6913 & ZG6915

Sensor-Operated Gear Driven Type Faucets with Battery Powered, Hardwired or Connected

Installation, Operation, Maintenance and Parts Manual



ZG6913



ZG6915

HYDRO·X POWER

plumbSMART™ POWERED BY ZURN

⚠ **CALIFORNIA WARNING:** Risk of cancer and reproductive harm from exposure to nickel (metallic and soluble compounds). See www.P65Warnings.ca.gov.

⚠ **AVERTISSEMENT EN CALIFORNIE:** Risque de cancer et de troubles de la reproduction en raison de l'exposition au nickel (composés métalliques et solubles). Consulter www.P65Warnings.ca.gov.

⚠ **ADVERTENCIA PARA CALIFORNIA:** Riesgo de cáncer y daño reproductivo por exposición al níquel (compuestos metálicos y solubles). Consulte www.P65Warnings.ca.gov.

LIMITED WARRANTY

All goods sold hereunder are warranted to be free from defects in material and factory workmanship for a period of three years from the date of purchase. Decorative finishes warranted for one year. We will replace at no costs goods that prove defective provided we are notified in writing of such defect and the goods are returned to us prepaid at Sanford, NC, with evidence that they have been properly maintained and used in accordance with instructions. We shall not be responsible for any labor charges or any loss, injury or damages whatsoever, including incidental or consequential damages. The sole and exclusive remedy shall be limited to the replacement of the defective goods. Before installation and use, the purchaser shall determine the suitability of the product for his intended use and the purchaser assumes all risk and liability whatever in connection therewith. Where permitted by law, the implied warranty of merchantability is expressly excluded. If the products sold hereunder are "consumer products," the implied warranty of merchantability is limited to a period of three years and shall be limited solely to the replacement of the defective goods. All weights stated in our catalogs and lists are approximate and are not guaranteed.

NOTICE: READ ENTIRE MANUAL PRIOR TO INSTALLING PRODUCT.

AVIS : LIRE L'ENSEMBLE DU MANUEL AVANT D'INSTALLER LE PRODUIT

Rev: E | Date: 7/02/2026 | C.N. No. 148008 | Prod./Dwg. No. FV846

Specifications

Sensor Range:	Fixed
Voltage:	6 “AA” 1.5V Alkaline Cells Parallel for Faucet 4 “AA” 1.5V Alkaline Cells Series for -W2 Connected Monitor
Operating Water Pressure:	10 psi [172 kPa] (Running); 125 Psi [552 kPa] Max (Static)
Operating Temperature:	33°F to 140°F [1°C to 60°C]
Aerator:	0.5 GPM Vandal-Resistant (Standard)

Important Safety Information

- Do not convert or modify this Zurn product. All warranties will be voided.
- All plumbing is to be installed in accordance with applicable codes and regulations.
- Water supply lines must be sized to provide an adequate volume of water for each fixture.
- Flush all water lines prior to making connections.
- *Warning: Do not connect an external power supply to the hydrogenerator’s barrel jack connector. Doing so could reduce product performance or pose a fire hazard*

Prior to Installation

- Before installing your faucet, the items listed below should already be installed on-site:
    - Lavatory/Sink
    - Drain line
    - Hot and cold water supply line or pre-tempered water supply line.
    - Installer/Servicer should not use pipe dope or teflon/thread sealant anywhere on this product, most notably threads and connection points.
    - Care shall be taken when installing this product to prevent marring of any exposed or decorative surfaces.
- Be sure the sink/lavatory/basin is clear from any objects upon making the sensor to electronics connection.

NOTE: The information in this manual is subject to change at any time without notice. Installations may be performed at different times of construction by different individuals. For this reason, these instructions should be left on-site with the facility or maintenance manager.

Electronic emission notices

This device complies with Part 15 of the FCC Rules. Operation is subject to the following two conditions: (1) this device may not cause harmful interference, and (2) this device must accept any interference received, including interference that may cause undesired operation.

The following information refers to Zurn Smart Connected Products, types: -W2. This equipment has been tested and found to comply with the limits for a Class A digital device, pursuant to Part 15 of the FCC Rules. These limits are designed to provide reasonable protection against harmful interference intended for use in non-residential/non-domestic environments. This equipment generates, uses, and can radiate radio frequency energy and, if not installed and used in accordance with the instructions, may cause harmful interference to radio communications. However, there is no guarantee that interference will not occur in a particular installation. If this equipment does cause harmful interference to radio or television reception, which can be determined by turning the equipment off and on, the user is encouraged to try to correct the interference by one or more of the following measures:

- Reorient or relocate the receiving antenna.
- Increase the separation between the equipment and receiver.
- Connect the equipment into an outlet on a circuit different from that to which the receiver is connected.
- Consult an authorized dealer or service representative for help.

Zurn is not responsible for any radio or television interference caused by using other than specified or recommended cables and connectors or by unauthorized changes or modifications to this equipment. Unauthorized changes or modifications could void the user's authority to operate the equipment.

User manual notice

This device contains licence-exempt transmitter(s)/receiver(s) that comply with Innovation, Science and Economic Development Canada’s licence-exempt RSS(s). Operation is subject to the following two conditions:

1. This device may not cause interference.
2. This device must accept any interference, including interference that may cause undesired operation of the device.

Avis du manuel de l’utilisateur

Cet appareil contient un (des) émetteur(s)/récepteur(s) exempté(s) de licence qui est (sont) conforme(s) au(x) CNR exempté(s) de licence du ministère de l’Innovation, des Sciences et du Développement économique du Canada. L’utilisation est soumise aux deux conditions suivantes :

1. Cet appareil ne doit pas provoquer d’interférences.
2. Cet appareil doit accepter toute interférence, y compris les interférences susceptibles de provoquer un fonctionnement indésirable de l’appareil.

Responsible party: ZURN WATER, LLC 511 W. Freshwater Way, Milwaukee, WI U.S.A. 53204 · Ph. 1-855-ONE-ZURN, Fax 919-775-3541

Package Contents

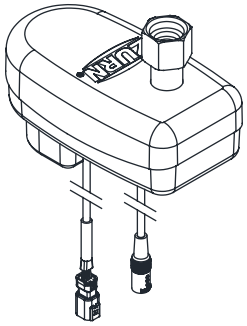

Electronics module

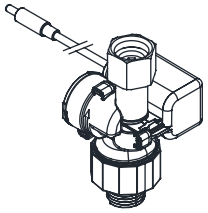

Hydrogenerator

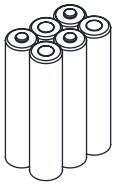

Batteries

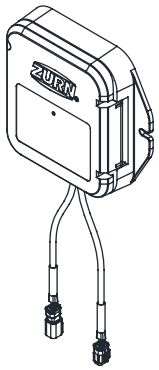

Connected Monitor (If ordered)

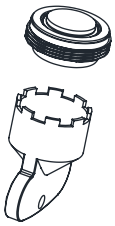

Aerator & Key

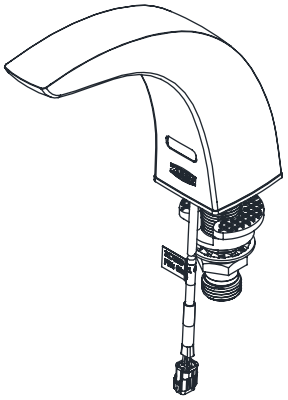

ZG6913 Faucet Spout & Mounting Hardware

OR

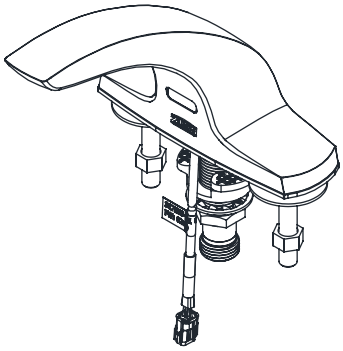

ZG6915 Faucet Spout & Mounting Hardware

Required Tools

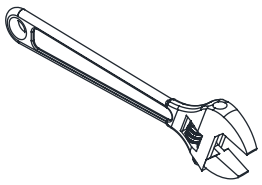

Adjustable Wrench



M3 hex Key Wrench (Supplied)

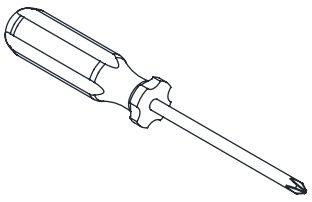

Phillips Head Screwdriver

Optional Accessories

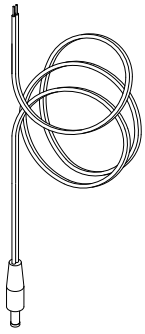

-CWB Pigtail P6900-CWB



Magic Magnet P6900-AT-MAG

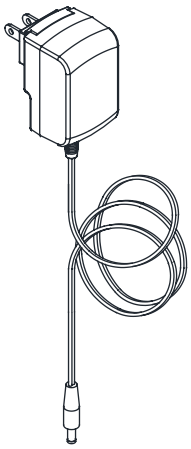

AC/DC Power Supply P6900-ACA

* For more accessories see the Parts List on the last page.

Cover Plate Installation Instructions (ZG6913 Series)

(For ZG6913 faucets with -CP4 or -CP8 suffix).

Thread the sensor connector wire and shank through the gasket. Align the gasket with the bottom of the faucet and firmly press them together. Then, pass the sensor connector and shank through the cover plate, securing them to the faucet using the supplied screws.

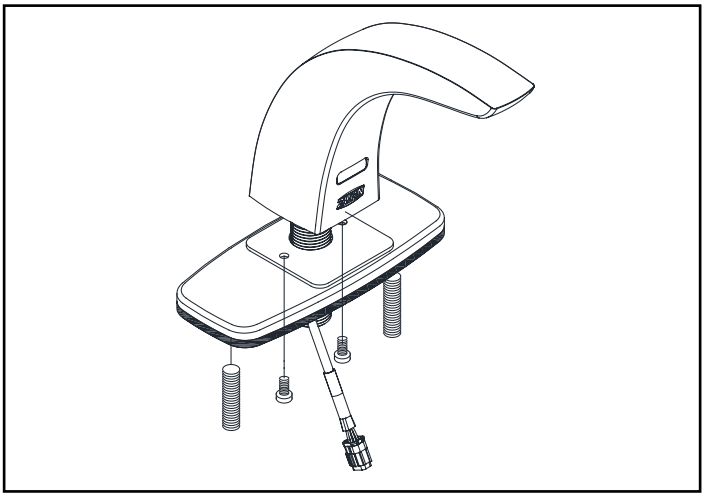

Spout Installation Instructions (All Configurations)

<u>NOTE</u>: Before installation, turn off water supplies to existing faucet and remove faucet if replacing an existing device. Clean the faucet basin and clear away debris. Flush all supply lines before connecting the faucet. Failure to do so may result in debris clogging the inlets and/or internal control and mixing valve of the faucet.

1. Carefully screw aerator into spout using included tool.
⚠ *Take care to not pinch blue o-ring*

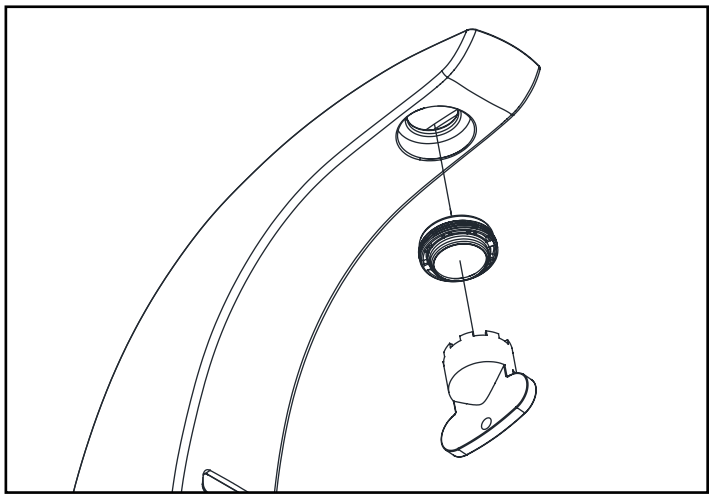

2. Install spout to sink using spout base gasket, plastic mounting washer, star washer and mounting nut.

Note: Faucet location needs to be within 3 feet radius above electrical outlet for ACA configurations.

ZG6913

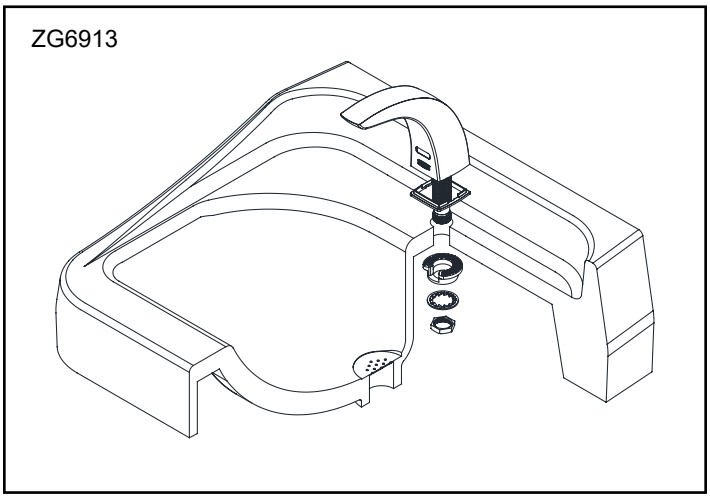

3. Ensure that slot in plastic washer is facing forward and sensor cable is routed outside of the plastic washer.

ZG6915

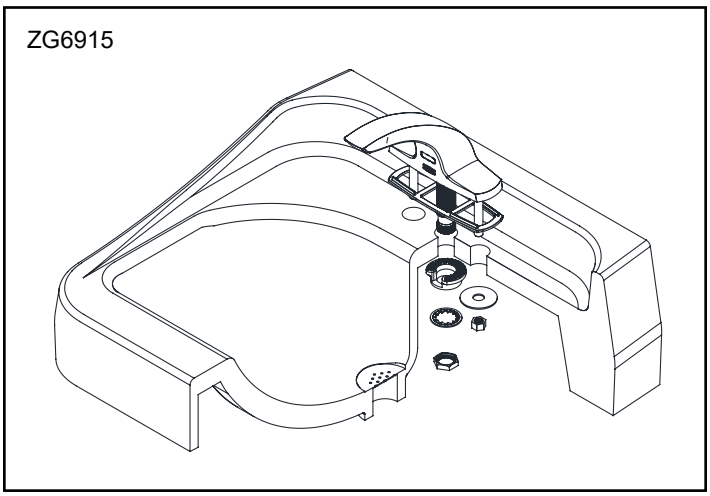

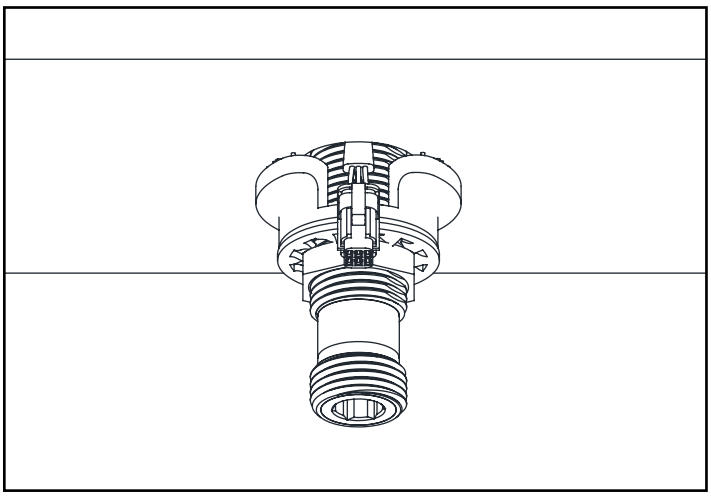

Electronics Module Installation Instructions

Note: The full assembly can be installed vertically with electronics module biased to the left or to the right, or in horizontal orientations with the help of composite filter (see parts list section) to accommodate available space under the sink.

1. Connect hydrogenerator and electronics module using one of these configurations by turning the swivel nut counter clockwise.

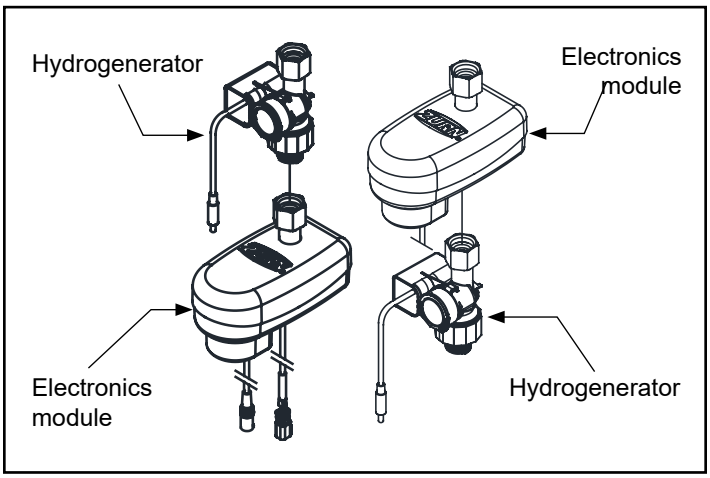

2. Connect electronics module power cable to hydrogenerator.

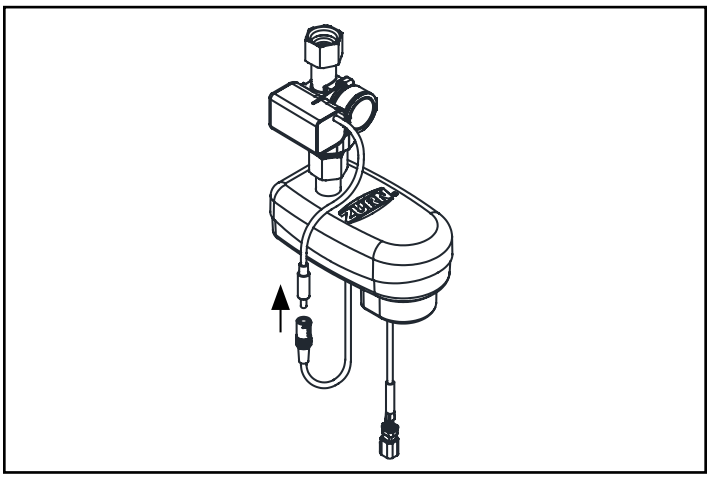

3. Open battery module using supplied hex key wrench and install supplied alkaline batteries in the electronics module in the configuration as shown.

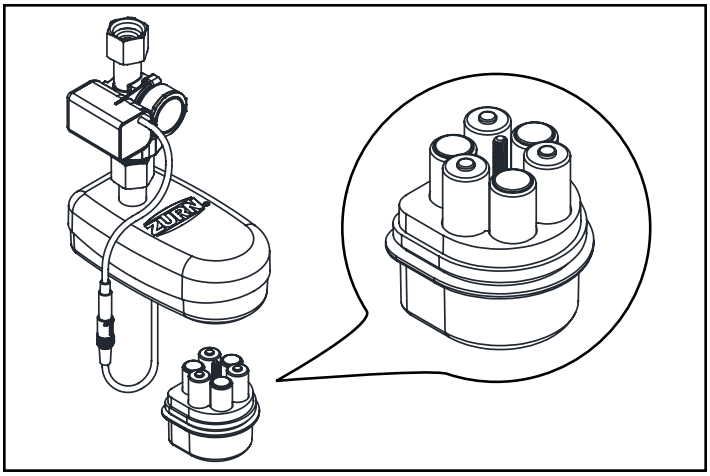

4. Tighten electronics module assembly with hydrogenerator to shank and connect water line(s).

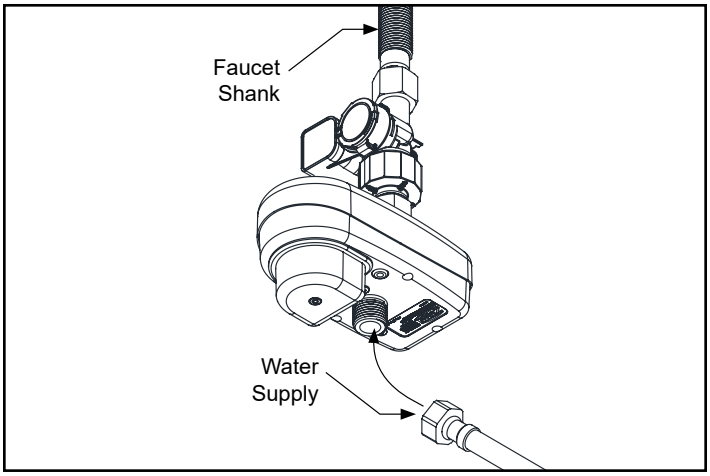

5. Ensure sink is clear of tools/debris and is in normal operating condition. Remove protective film from sensor lens if needed.
6. Turn on water supply(ies).
7. Connect sensor cable from electronics module to sensor cable from spout.

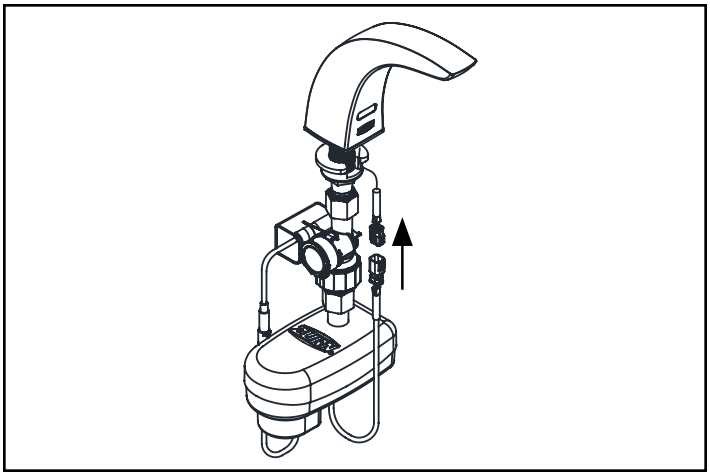

Note: For the initial installation, utilize the provided alkaline batteries. When replacing batteries thereafter, avoid combining different battery brands or intermixing old and new batteries.

Available on Galaxy Store

plumb PRO

Available on the App Store

To customize the following individual electronics module settings, download Zurn plumbPRO App.

- Adjustable Time Out Feature
- Hygienic Line Flushing
- Sensing Mode
- Sensor Range Adjustment
- Battery Status

https://www.zurn.com/innovation-efficiency/plumbpro

Endpoint & Electronic Module Installation Instructions (-ACA/-CWB)

Note: The full assembly can be installed vertically with electronics module biased to the left or to the right, or in horizontal orientations with the help of composite filter (see parts list section) to accommodate available space under the sink.

1. Open battery module using supplied Allen wrench and install supplied alkaline batteries in the electronics module.

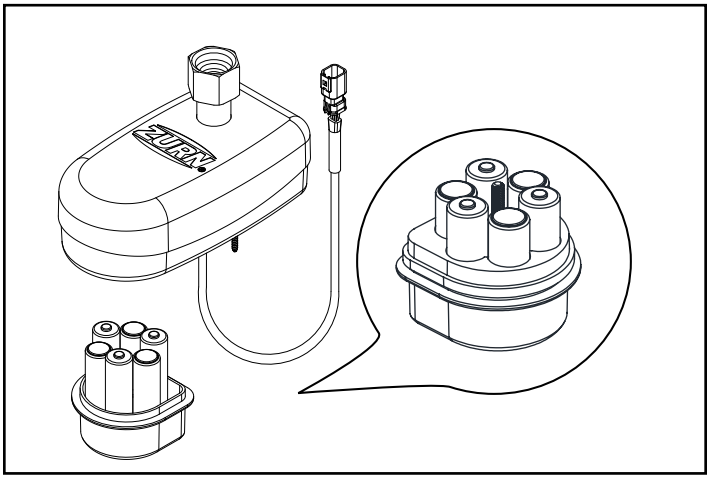

2. Tighten electronics module assembly to shank and connect water line(s). Connect sensor inline connector to sensor cable from spout and to the electronic module.

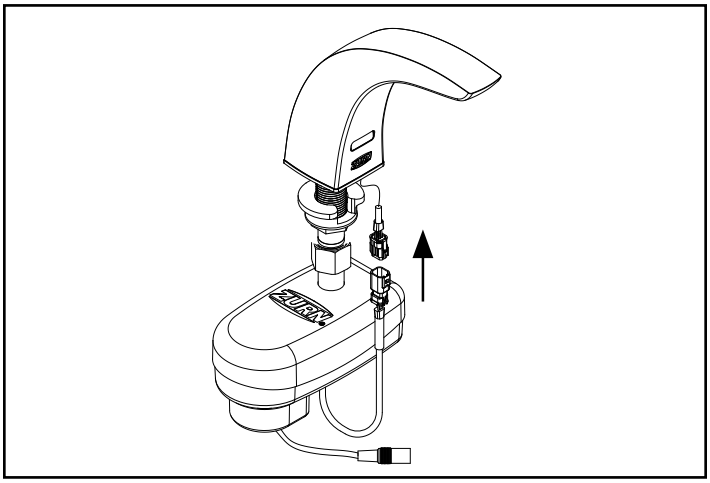

3a. Optional ACA version: Connect inline connector from Module and AC adapter.

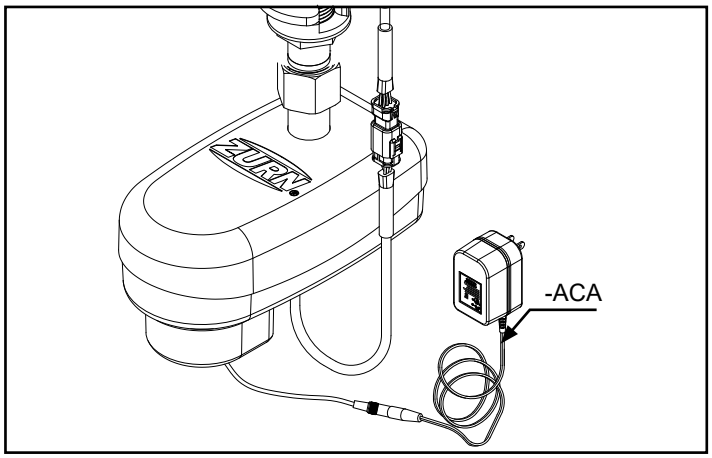

3b. Optional HW6 (Hardwired 6V) version: Connect inline connector and hardwire adapter. When securing the CWB wires to the screw terminals on HW6 unit, the BLACK WITH DASHED MARKINGS should be connected to the Positive (+) terminal, and the SOLID BLACK wire should be connected to the Negative (-) terminal.

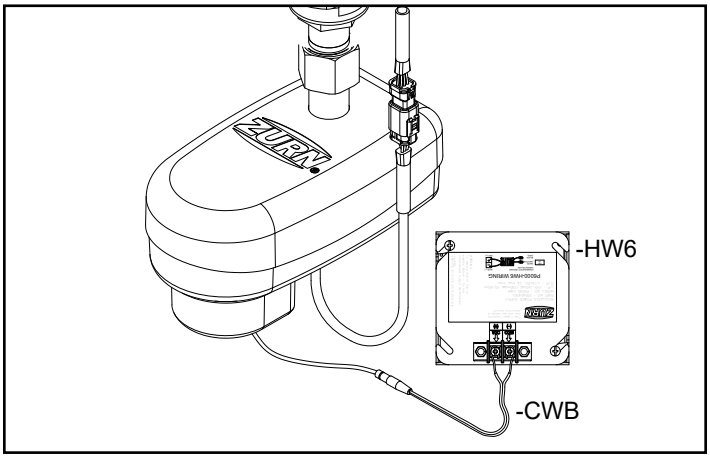

3C.

Optional MJ unit (sold separately)

Note: Do not connect more than 3 boxes to a single transformer

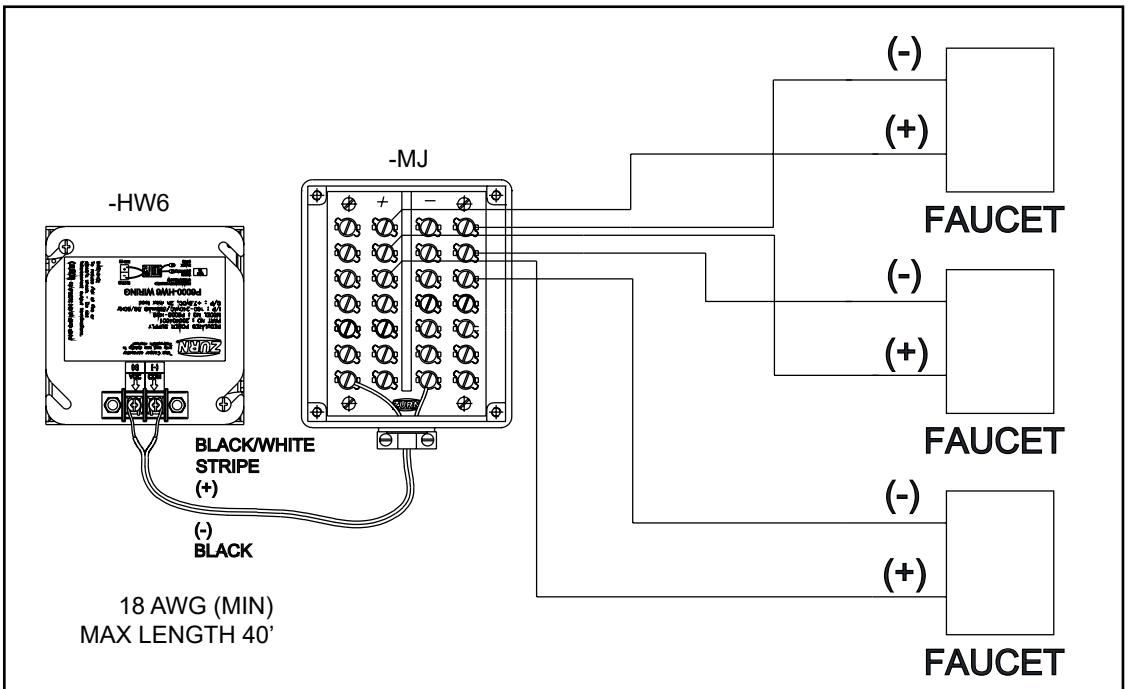

Notes:

1. Failure to observe proper polarity will result in failure of the sensor and/or power converter.
2. Use #18 AWG for interconnections.

Connected Monitor Installation Instructions (-W2)

NOTE: Follow and complete Electronics Module Installation Instruction before continue.

1. Install Connected Monitor on wall surface within 2 feet radius of faucet with dry wall anchors & screws or doubled sided VHB tape.

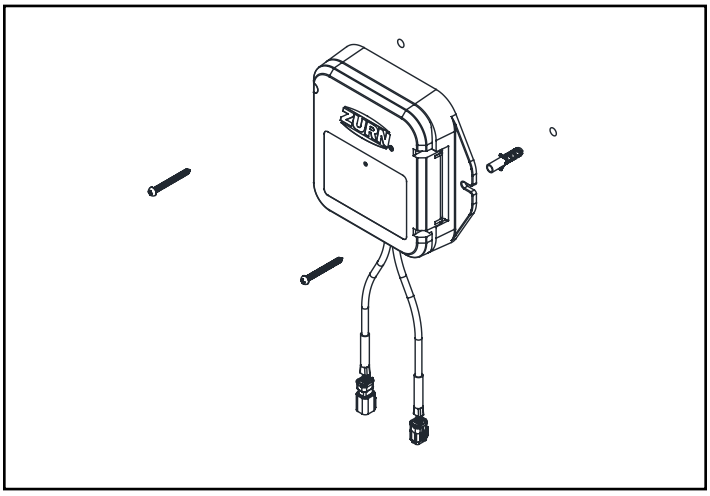

2. Loosen lid screw with supplied 3mm hex key wrench and open the lid.

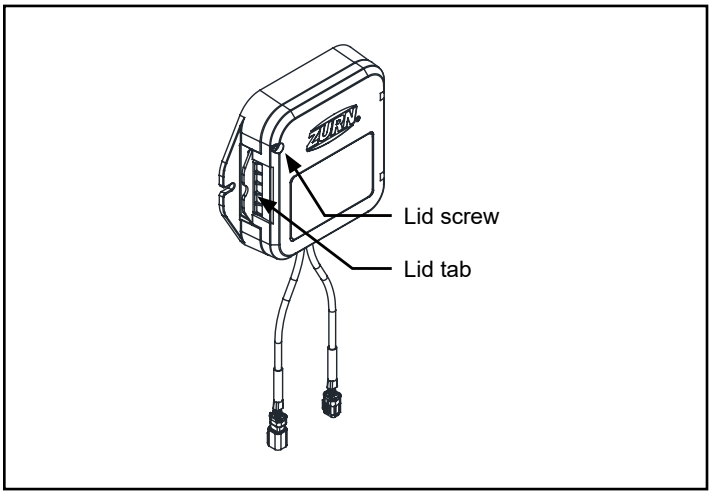

3. Install supplied alkaline batteries. Close lid and secure by pressing on the lid tab until it snaps into place. Then tighten lid screw.

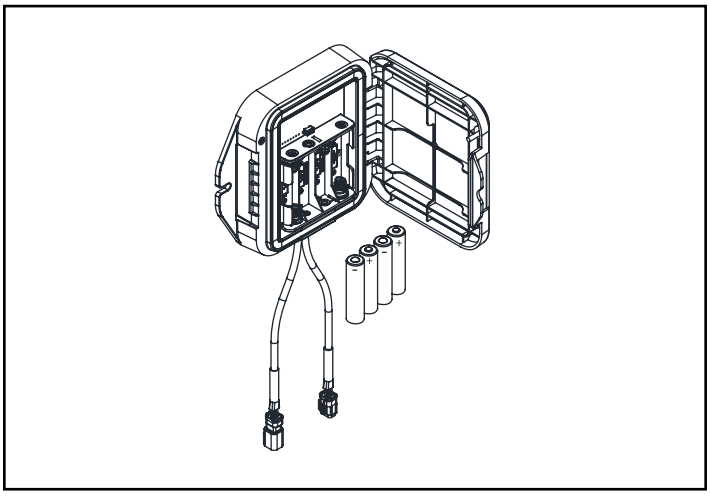

4. Unplug the sensor connection from the spout to the electronics module by compressing the clip on the connector and pulling apart.

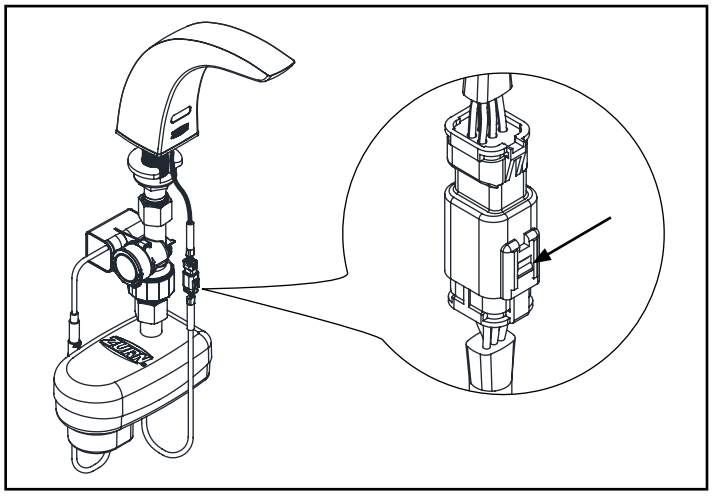

5. Connect the electronics module to the connected monitor first, and the spout to the connected monitor second.

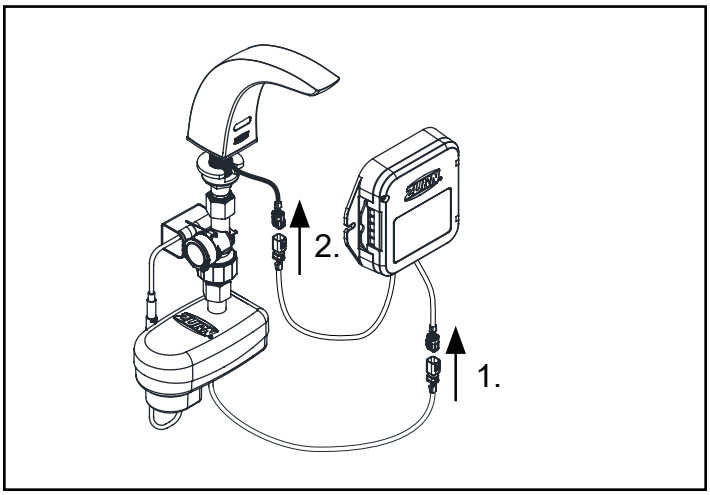

During initial installation, use the supplied alkaline batteries. During subsequent battery changes, use either alkaline or lithium batteries; however, do not mix alkaline and lithium batteries together.
During servicing or changing of batteries, wipe down monitor to ensure water does not enter the housing when the lid is opened.

Endpoint & Connected Monitor Installation Instructions (-W2-ACA/-W2-CWB)

NOTE: Follow and complete Electronics Module Installation Instruction before continue.

1. Install Connected Monitor on wall surface within 2 feet radius of faucet with dry wall anchors & screws or doubled sided VHB tape.

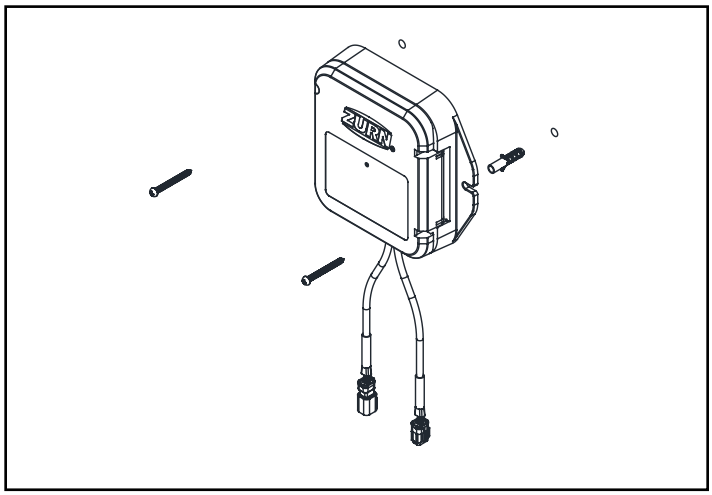

2. Loosen lid screw with supplied 3mm hex key wrench and open the lid.

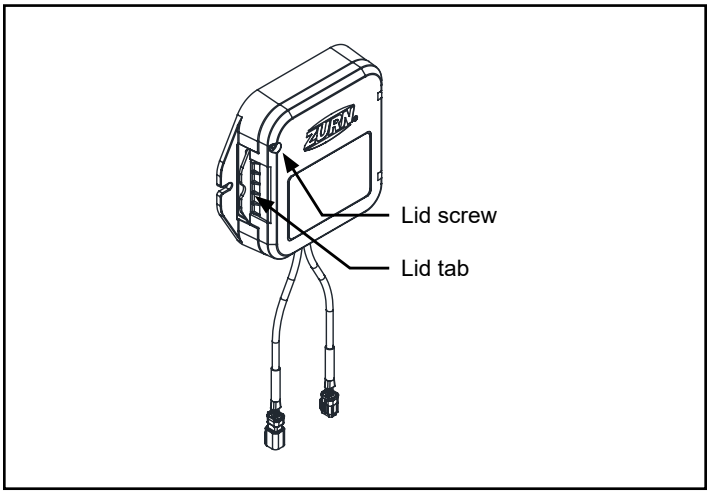

3. Install supplied alkaline batteries. Close lid and secure by pressing on the lid tab until it snaps into place. Then tighten lid screw.

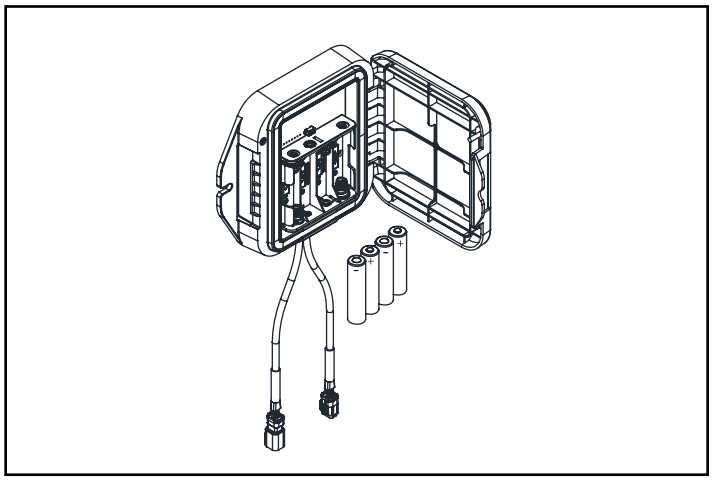

4. Open battery module using supplied Allen wrench and install supplied alkaline batteries in the electronics module.

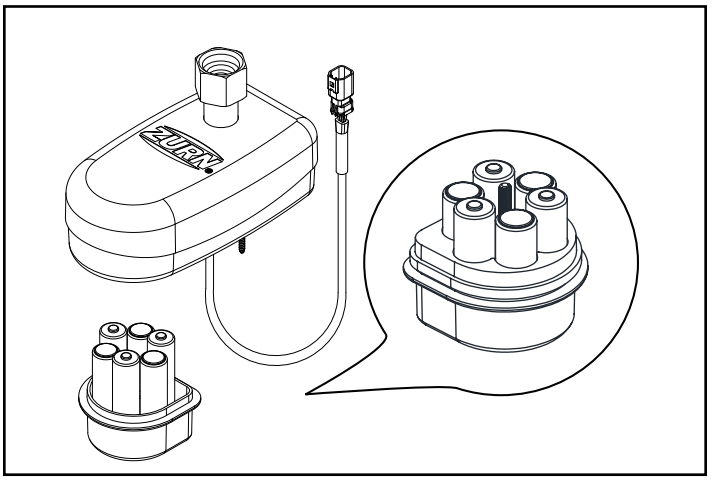

5. Connect the electronics module to the connected monitor

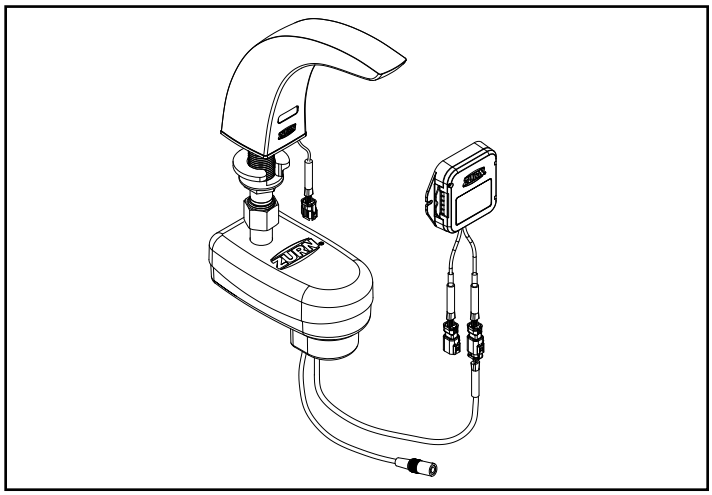

6a. Optional ACA version: Connect inline connector from electronics module and AC adapter.

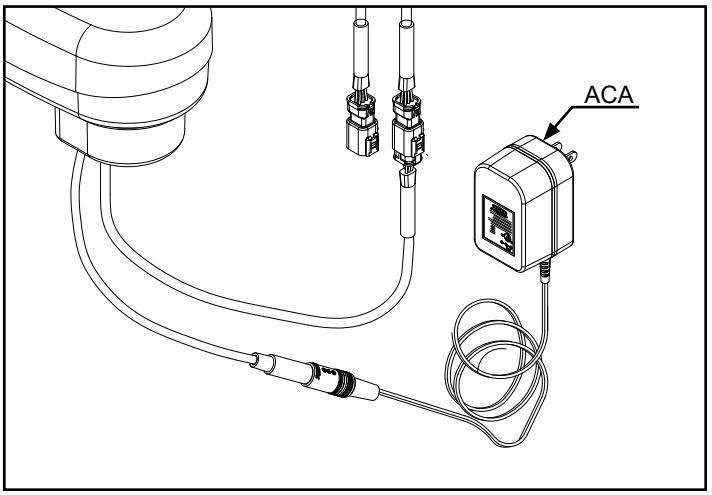

6b. Optional HW6 (Hardwired 6V) version: Connect inline connector and hardwire adapter. When securing the CWB wires to the screw terminals on HW6 unit, the BLACK WITH DASHED MARKINGS should be connected to the Positive (+) terminal, and the SOLID BLACK wire should be connected to the Negative (-) terminal.

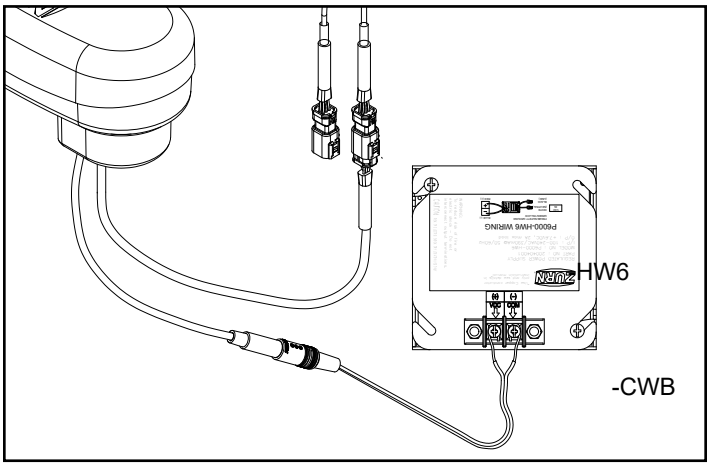

6c.

Optional MJ unit (sold separately)

Note: Do not connect more than 3 boxes to a single transformer

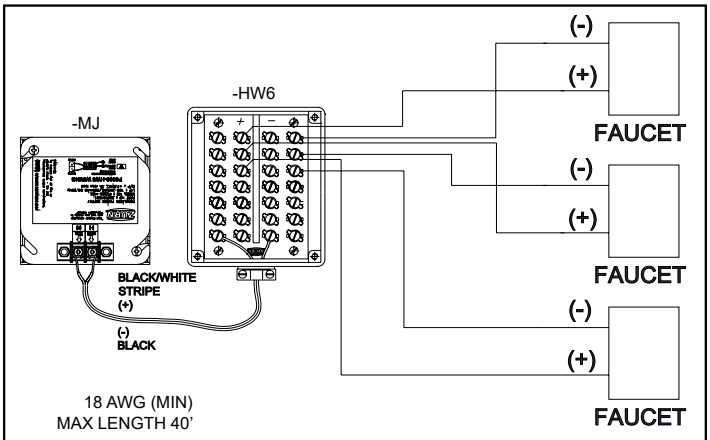

Notes:

1. Failure to observe proper polarity will result in failure of the sensor and/or power converter.
2. Use #18 AWG for interconnections.

7. Connect sensor cable from spout to monitor.

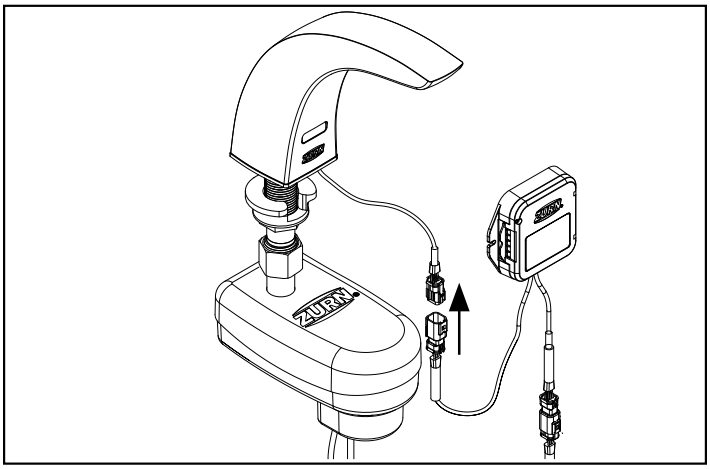

Mixing Valve Installation (All Configurations)

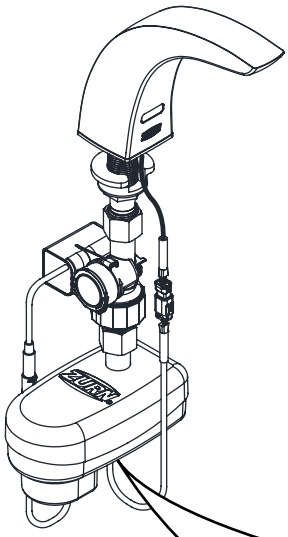

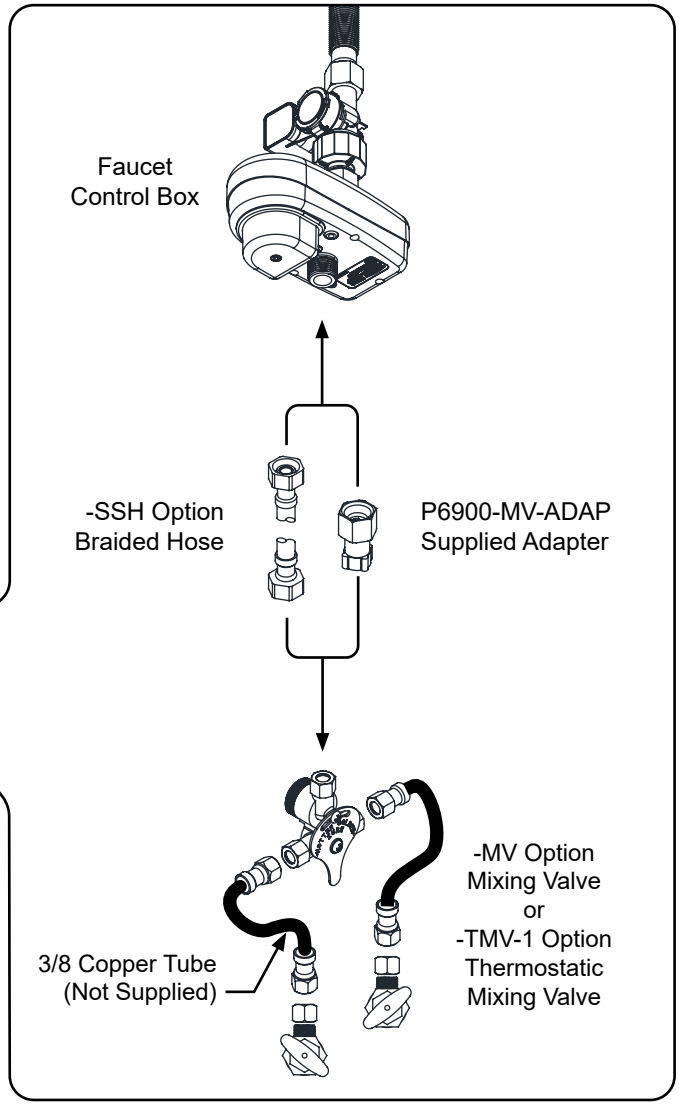

Note:To install Braided Hose, need to hold swivel nut on control box or mixing valve in position then apply torque by hand or wrench to install. Do not over torque the nut.

Sensor Range Adjustment (All configurations when necessary)

1. Ensure that the faucet is installed and powered has been applied.
2. Place and hold the Magic Magnet (optional accessory: P6900-AT-MAG) in the upper right hand corner of the sensor as shown. An indicating light will activate when the magnet is correctly positioned.
3. Wait until the light starts to blink, then remove the magnet. (Faucet has entered the calibration mode.)
4. Place a target at the desired activation range in front of the faucet sensor. (Cardboard, hand, etc.)
5. Wait approximately 10 seconds during the calibration cycle. Do not move the target during this period.
6. Calibration is complete when the light stops blinking.
7. Confirm calibration distance by moving the target back, then slowly forward until the faucet activates at the desired calibration distance.

ZG6913

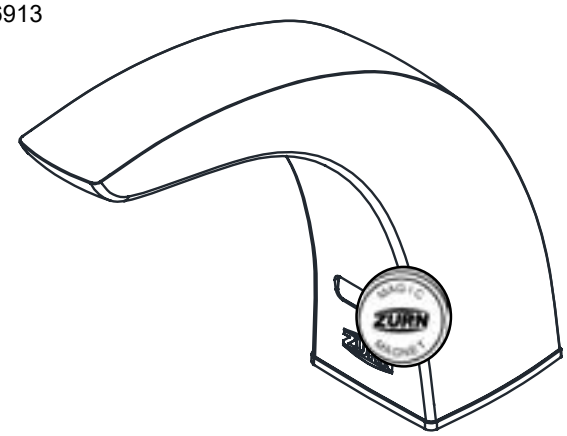

ZG6915

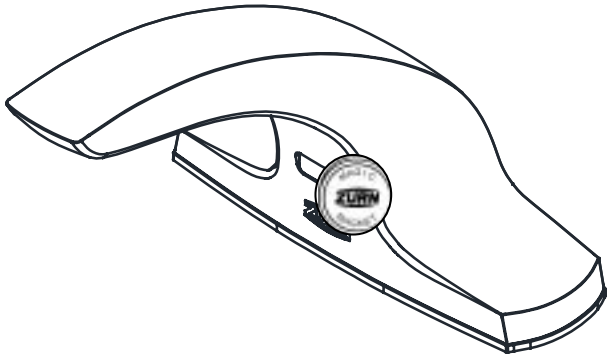

Care and Cleaning Instructions (All Configurations)

- Do not use any abrasive or chemical cleaners to clean the faucets. Do not use any cleaners with an acid base.
- If abrasives or chemicals are used it can lead to dulling of luster, attacking of chrome plating or decorative finishes.
- ONLY use mildly warm soapy water, and then wipe the device dry with a clean/soft towel or cloth.
- Upon cleaning other areas of the restroom be sure the sensor lenses are protected from other cleaning chemicals/solvents to prevent potential damages to the sensor and/or electronics.

Gateway Instruction (-W2)

Step 1. Request Gateway:

You can request your Ethernet or LTE gateway by visiting

Zurn.com/plumbsmart-gateway-request

or call Zurn Customer Care at 1-844-987-6737

Step 2. Cabling, Powering and Connecting Your Device:

1. Connect one end of the RJ45 Ethernet cable (supplied) to the gateway's Ethernet port and plug the cable's other end into the nearest wall port of the building's Ethernet network.
2. Connect the power supply to the power jack.
3. Wait for status LED to go from ON to double flash every second, the LoRa LED to turn ON solid, and the cell LED (if LTE enabled) to flash once every 3 seconds. Should take around 1-2 minutes depending on location. Your gateway is now ready to transmit data from your Zurn connected product.
4. Zurn Gateways have been set to DHCP by default. Please consult local IT support for possible additional access requirements for your network.

Step 3. Determining General Location for the Zurn Gateway:

- Select a location central to all devices to be connected to this gateway. Ideal mapping of Gateway to connected devices will resemble a wagon wheel.
- Place the gateway as high as possible, such as near the top of a wall.
- Avoid obstructions. Thick walls and reflective surfaces, such as metal, weaken the signal between the gateway and other devices.
- The LoRa antenna is an omni-directional antenna, but for best results, mount the device so the LoRa antenna is in a vertical position near the top of a wall. We recommend conducting a site survey to test the signal strength in different locations before you mount the device.

Step 4. Mounting the Zurn Gateway:

The device ships with a mounting bracket. You will also need:

- Four #6 screws with anchors
- Screwdriver
- Drill

1. Determine where you want to mount the device.
2. Mark where you want the screws to go.
3. Drill holes for the screws and insert anchors.
4. Place the mounting bracket and secure it with screws.
5. Attach the device to the bracket and rotate to lock into place.

Register in plumbSMART (-W2)

NOTE: Instructions below are duplicated from registration card supplied with monitor

1. Install Zurn Connected Product(s)
2. Install Zurn Gateway per the Gateway Instructions Manual
3. Request plumbSMART Administrator Account at 844-987-6737
4. Zurn creates your Enterprise Account for you! (You will be required to identify your building location, number of floors, and number of rooms.)
5. Log in to plumbsmart.zurn.com
6. Register each Connected Product in plumbSMART (Watch How-To Videos to Get Started. Located in the support section inside the portal.)

LED Indicator Status & Trouble Shooting

LED Flashing Pattern	Causes	Recommended Course of action
Rapid Blinking Continuiously	Low Battery	The batteries are low, and it is advisable to replace them before they deplete to a point where the faucet can no longer operate.
LED solid illumination	Bluetooth Mode Activated	To disable Bluetooth mode, activate sensor.
Illumination for 1 second	Normal Startup/Reset Initialization	Typically encountered during a new battery installation. If this issue persists, it may signal a reset problem with the valve; please reach out to customer support for assistance.

Problem	Possible Cause	Corrective Action
Faucet is non-responsive	Low Battery	Monitor the battery level and, if necessary, replace it. Take note of the correct polarity during replacement.
	Sensor Not Connected	Ensure that the connections of the Battery and Hydro Generator are properly joined, and with the water turned on, proceed to attach the sensor connector to the valve body.
	Water Supply not Turned on	Ensure that the water supply is turned on and is feeding into the inlet of the faucet.
	Electronics module connector cable has pins either bent or broken.	Check to see if To reset the valve, unplug and replug the sensor cable. Additionally, inspect if pins are missing, bent, or broken. If any issues are found, it indicates a need for the replacement of the electronics module. pins are missing, bent, or broken. If yes, then the electronics module needs to be replaced
	Sensor lens could have surface damage, scratches, or deposit build ups.	Inspect the sensor lens. May require cleaning with a damp cloth or spout/sensor replacement
	Orientation	Ensure that the front-facing IR sensor is not directed toward a mirror or any reflective surface. For downlooking sensors, perform a reset by resetting the sensor cable to restart both the sensor and valve then initialize a new calibration.
Faucet does not activate after initial installation	The protective film is an obstructing the lens.	Inspect whether the protective film has been removed from the lens. If not, please remove it.
Continuous flow	Electronics module connector cable has pins either bent or broken.	To reset the valve, unplug and replug the sensor cable. Additionally, inspect if pins are missing, bent, or broken. If any issues are found, it indicates a need for the replacement of the electronics module.
	Battery issue	Check battery levels and re-install batteries to reset valve.
Ghost Activation	Orientation	Ensure that the front-facing IR sensor is not directed toward a mirror or any reflective surface. For downlooking sensors, perform a reset by resetting the sensor cable to restart both the sensor and valve then initialize a new calibration.
Sensor faucet is leaking underneath the sink or counter	Mounting hardware is not sufficiently tightened (faucet shank, electronics module, supply hoses, etc).	Inspect and confirm that the nuts and joints are securely tightened from the supply stop all the way to the faucet shank.
	The gasket in the valve box nut, where it assembles to the faucet shank, is missing.	Verify that the water supply stops are shut off. Examine and confirm the installation of the gasket, ensuring it is undamaged. If the gasket is not installed, proceed to install it. In case of any damage, replace the gasket with a new one.

For further assistance with troubleshooting visit http://www.zurn.com

Trouble Shooting: LoRa Monitor (-W2)

Problem	Corrective Action
"Device Not Communicating" posted in plumbSMART 	**Step 1** Verify LoRa Monitor electronics are plugged in / Verify batteries installed in LoRa Monitor electronics and have sufficient charge (whichever applies). Install new batteries, as needed. Alert on product's page in plumbSMART should clear within 1 hour or on next faucet activation. (Refresh web page by clicking on reload icon in the browser to clear the alert.)
	Step 2 If problem still present, verify gateway is within range of LoRa Monitor and functioning (see Gateway Troubleshooting section)
	Step 3 If problem is still present, verify plumbSMART subscription status on product page's Details tab is listed as "Activated" **NETWORK:** Senet **SUBSCRIPTION STATUS:** *Activated* **LAST HEARD FROM:** 07/14/2020, 04:29 PM CDT If listed as "Deactivated", contact Zurn Customer Service at 1.855.ONE.ZURN (1.855.663.9876) for assistance.
"Status – Good" posted in plumbSMART and faucet not actuating 	**Step 1** Verify LoRa Monitor's cables are connected to IR sensor and Faucet actuator electronics. Restore proper electrical connection, as needed.
	Step 2 Test activate the faucet. If problem persists, see Faucet Troubleshooting section in this guide for other steps.
"Status – Good" posted in plumbSMART and faucet actuates but usage event data not appearing in plumbSMART Charts 	**Step 1** Verify gateway is powered and LoRa Status LED is ON. If not, apply power per Zurn Gateway Installation Guide or see Gateway Troubleshooting section in this guide for other steps.
	Step 2 If problem still present, verify plumbSMART subscription status on product page's Details tab listed as "Activated" **NETWORK:** Senet **SUBSCRIPTION STATUS:** *Activated* **LAST HEARD FROM:** 07/14/2020, 04:29 PM CDT If listed as "Deactivated", contact Zurn Customer Service at 1.855.ONE.ZURN (1.855.663.9876) for assistance.
	Step 3 If problem still present, the LoRa Monitor electronics may be faulty. Contact Zurn Customer Service at 1.855.ONE.ZURN (1.855.663.9876) for assistance with additional troubleshooting steps and, if needed, unit replacement.

For further assistance with troubleshooting, visit https://plumbsmart.zurn.com/app/training

Trouble Shooting: Gateway (-W2)

Problem	Corrective Action
"Status – Good" posted in plumbSMART and faucet actuation event data not appearing in plumbSMART (< 2 hours) or "Device Not Communicating" warning or severe alert posted in plumbSMART for all devices (> 3 hours) 	**Step 1** Verify gateway Status LED flashes twice every 2 seconds. If LED is OFF or ON solid, power cycle the gateway and wait for no more than 5 minutes for unit to initialize and connect.
	Step 2 After initialization is finished, LORA LED should turn ON solid within an additional minute.
	Step 3 If LORA LED does not turn ON solid and ethernet cable connected, contact facility IT administrator to modify port rules to allow Zurn gateway to access the internet via local router. If gateway model is ETH/LTE, visually verify SIM card is installed in designated slot on the side of gateway. If unit has a SIM card, then disconnect ethernet cable and power cycle the gateway and wait for unit to initialize and connect. LORA LED should turn ON solid after initialization.
	Step 4 If problem still present, move gateway closer to LoRa monitors and/or verify gateway mounting, orientation and connections comply with requirements listed in Zurn Gateway Installation Guide. Contact Zurn Customer Service at 1.855.ONE.ZURN (1.855.663.9876) for assistance with additional troubleshooting steps.

For further assistance with troubleshooting, visit https://plumbsmart.zurn.com/app/training

ZG6913 & ZG6915 Parts List

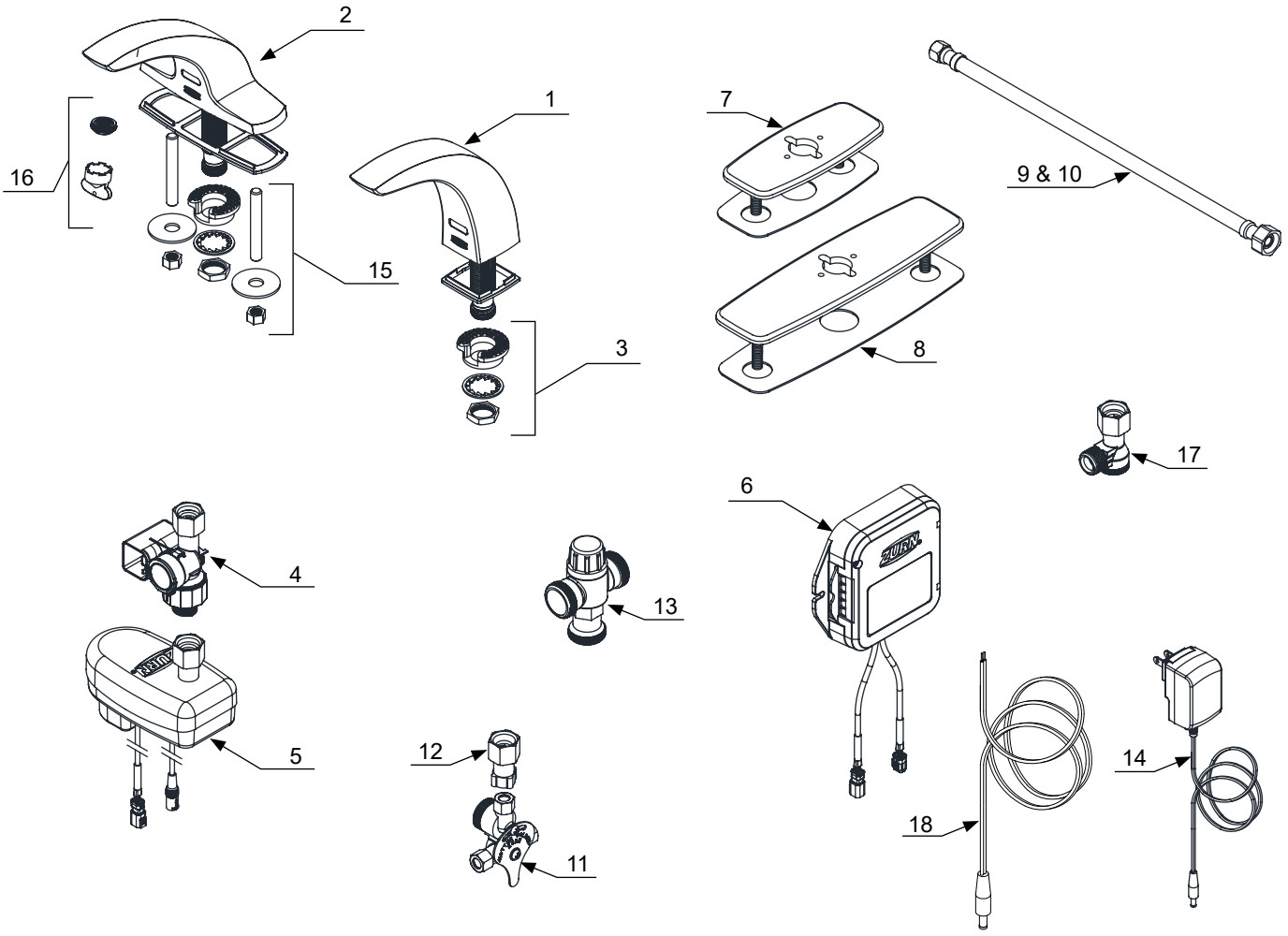

Description	Product No.
Item 1: ZG6913 Spout Assembly with Sensor	PG6913-1
Item 2: ZG6915 Spout Assembly with Sensor	PG6915-1
Item 3: Mounting Kit	P6900-43
Item 4: Hydrogenerator	P6900-HYD
Item 5: Ceramic valve Control Box	PG6900-B-L
Item 6: Smart Connected Faucet Retrofit Kit	P6900-RK-W1/W2
Item 7: 4" Cast Cover Plate w/Gasket	P6950-CP4
Item 8: 8" Cast Cover Plate w/Gasket	P6950-CP8
Item 9: Single Stainless Supply Hose (XL)	P6900-SSH
Item 10: Dual Stainless Supply Hose (XL)	P6900-SSH-2

Description	Product No.
Item 11: Mixing Valve with Filter	P6900-MV-XL
Item 12: Composite Mixing Valve Adapter	P6900-MV-ADAP
Item 13: Thermostatic Mixing Valve	P6900-TMV-1-XL
Item 14: Optional Plug-in Power Converter	P6900-ACA
Item 15 : ZG6915 Mounting Stud Kit	P6915-MOUNTING-KIT
Item 16 : 0.5gpm Aerator 1.5gpm Aerator 1.5gpm Aerator (Laminar) 1.0gpm Aerator 0.35gpm Aerator	P6900-20FS P6900-20ES P6900-20JS P6900-20LS P6900-20MS
Item 17 : Composite Filter Assembly	P6900-120BC
Item 18 : Optional -CWB Pigtail	P6900-CWB