# Model(s) Z6920-XL

AquaSense® Gooseneck Sensor Faucet

TAG

## ARCHITECTURAL/ENGINEERING SPECIFICATION:

Zurn AquaSense® faucets are ideal for high-use applications where durability and hands-free operation are necessary. ADA compliant, battery-powered, polished chrome-plated cast brass sensor faucet with infrared proximity sensor for retrofit and new construction. Unit is furnished with a standard 0.5 GPM aerator and mounting hardware. Zurn Lead Free (-XL) is the line of durable, high quality brass faucets and fixtures that are designed and manufactured to comply with Section 1417 of the Safe Drinking Water Act (SDWA) which mandates a weighted average lead content of no more than 0.25% of the wetted surface.



## PRODUCT FEATURES:

- Infrared convergence-type proximity sensor
- 30-second time out feature
- Chrome-plated, cast brass body
- In-line filter
- 4 "AA" batteries
- Inlet for a 1/2" ball riser

## FLOW OPTIONS:

| | Suffix | Flow GPM [L] | Vandal-Resistant | WaterSense* | Outlet Type |
|---|---|---|---|---|---|
| | -E | 1.5 GPM [5.7L] | x | x | Aerator |
| | -F | 0.5 GPM [1.9L] | x | | Spray |
| | -J | 1.5 GPM [5.7L] | x | x | Laminar |
| | -K | 1.0 GPM [3.8L] | x | x | Laminar |
| | -L | 1.0 GPM [3.8L] | x | x | Aerator |
| | -M | 0.35 GPM [1.3L] | x | | Spray |
| | -N | 0.5 GPM [1.9L] | x | | Laminar |

## SUFFIX OPTIONS:

| | | |
|---|---|---|
| | -ADM | Above-Deck Mixer |
| | -ADM-1 | Above-Deck Mixer with 4" [102mm] Cover Plate |
| | -ADM-2 | Above-Deck Mixer with 8" [203mm] Cover Plate |
| | -CP4 | Cover Plate 4" [102mm] Centers |
| | -CP8 | Cover Plate 8" [203mm] Centers |
| | -H4 | Wrist Blade handle for ADM |
| | -MV | Temperature Mixing Valve |
| | -SH | Three Supply Hoses for Mixing Valve |
| | -TMV-1 | Thermostatic Mixing Valve for Single Faucets (ASSE Listed 1070) |

## POWER OPTIONS:

| | | |
|---|---|---|
| | | Power Supply Option |
| | -ACA | Plug-in Power Converter with Battery Backup |
| | -CWB | Connector Wire for Hardwire Power Converter |
| | | Power Supply Accessories (Sold Separately) |
| | -HW6 | Hardwired Power Converter |
| | -MJ | Mini Junction Box |

## PRODUCT COMPLIANCE:

ADA
ASME A112.18.1/CSA B125.1, ASME A112.18.1
CEC
CSA B125.1
IPC
NSF 372
NSF 61
WaterSense

*Complies with ADA & ICC A117.1 accessibility requirements when installed according to the requirements outlined in these standards.

*This product should be used with a WaterSense labeled counterpart with a compatible flow volume to ensure that the entire system meets the requirements for water efficiency and performance.

*Although products with certain combinations of options and features will meet or comply with these standards and/or certifications, not every combination of options and features will result in such compliance. If you have any questions about your particular product, please contact our Customer Care Dept. at 1-855-ONE-ZURN (United States) or 1-877-892-5216 (Canada) for confirmation.

## DOCUMENTATION LINKS:

Maintenance Use and Care - Care and Cleaning (pdf) - FV808.pdf
Installation Guide - Installation Instruction (pdf) - Z6920-XL
Warranty - Warranty (pdf ) - Z6920-XL
Installation Instructions for Smart Connected - Z6920-XL and Z6922-XL Series



by Zurn Elkay Water Solutions
5000 Elwin Buchanan Drive, Sanford, NC 27330
3544 Nashua Drive, Mississauga, Ontario L4V1L2
ZURN.COM US 1.855.ONE.ZURN CANADA 1.877.892.5216
zurn.com/patents


© 2026 

## ROUGH-IN / INSTALLATION DRAWING

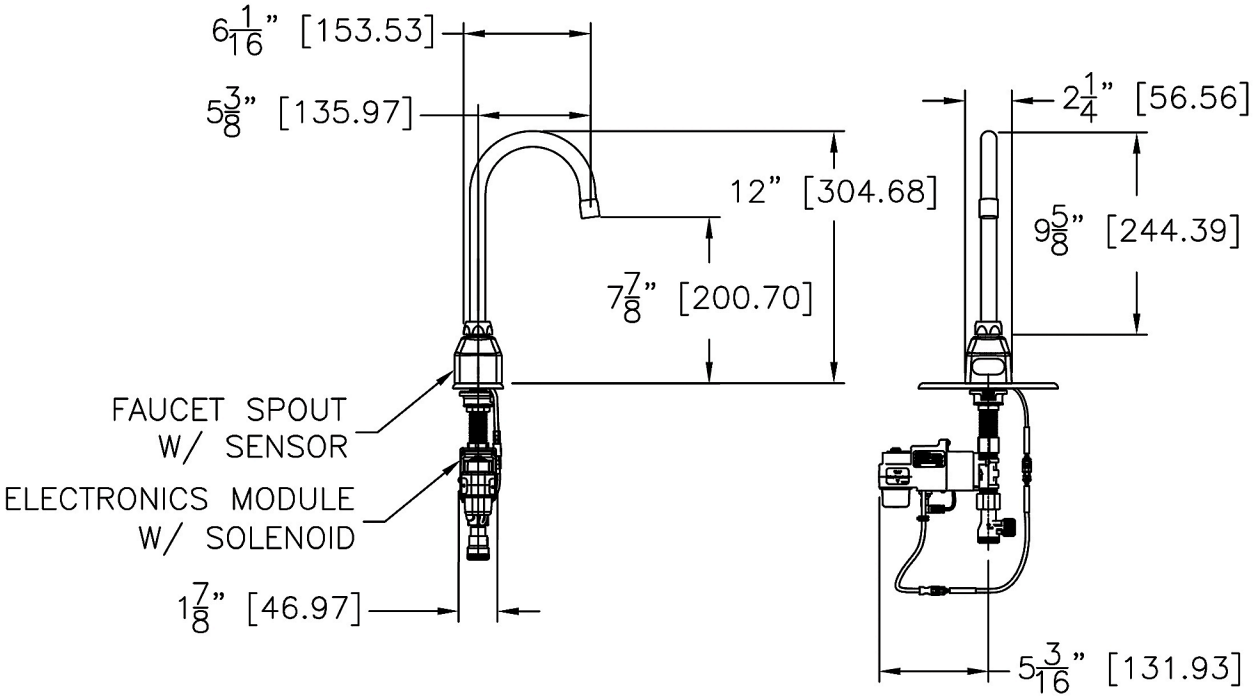




by Zurn Elkay Water Solutions
5000 Elwin Buchanan Drive, Sanford, NC 27330
3544 Nashua Drive, Mississauga, Ontario L4V1L2
ZURN.COM US 1.855.ONE.ZURN CANADA 1.877.892.5216
zurn.com/patents


© 2026 