# PACKAGED GAS/ELECTRIC

75012623

REV A

The sections that appear on this illustration are for all options.
Sections and options will appear in the Parts List if factory installed

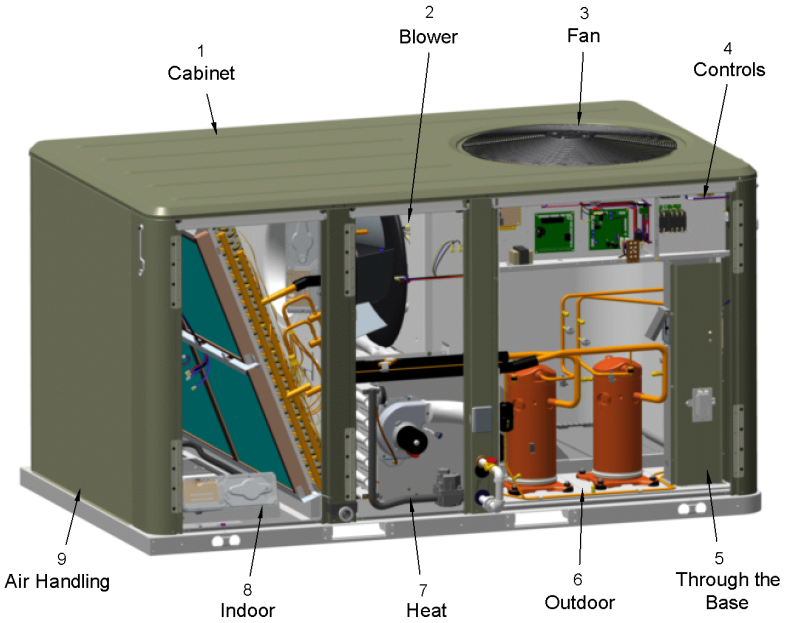


This is a typical illustration. The unit in the field may not appear exactly as shown.

| Part No. | Reference No. | Quantity | Description |
|---|---|---|---|
| 75012460 | 1 | | INTERIOR SHEET METAL |
| 75011721 | 1 | | UNIT BASE COMPONENTS |
| 75012243 | 2 | | BLOWER-INDOOR, PLENUM FAN & TCO2 |
| 75012613 | 3 | | FAN - OUTDOOR |
| 75012743 | 4 | | CONTROL PANEL |
| 75011851 | 4 | | HARNESS - COMMON CONTROLS |
| 75012827 | 4 | | HARNESS - IDM ADAPTER 575V |
| 75011855 | 4 | | TERMINAL BLOCK - CONTROLS (CTB) |
| 75012488 | 5 | | THROUGH THE BASE ELECTRIC |
| 75012666 | 6 | | OUTDOOR COIL, COMPRESSORS |
| 75012435 | 7 | | BURNERS, GAS VALVE, INDUCER, FD,FR, IP, TCO |
| 75012465 | 7 | | HEAT EXCHANGER |
| 75012667 | 8 | | INDOOR COIL, DRAIN PAN, TXVS, FILTERS |
| NGRAPHIC | 10 | | OPTIONAL FIELD INSTALLED ACCESSORIES |
| 75012766 | 11 | | MODEL NUMBER DESCRIPTION, DIGITS 1-16 |
| 75012767 | 11 | | MODEL NUMBER DESCRIPTION, DIGITS 17-31 |

# INTERIOR SHEET METAL

75012460

REV
A

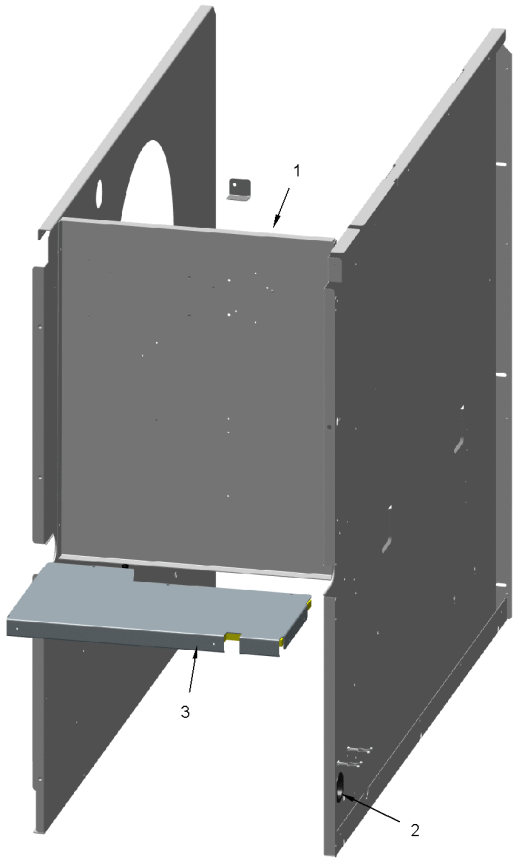


This is a typical illustration. The unit in the field may not appear exactly as shown.

| Part No. | Reference No. | Quantity | Description |
|---|---|---|---|
| PNL26794 | 1 | 1 | PANEL; INDOOR FAN BLOCKOFF, 24.56 X 19.50 |
| BUS00338 | 2 | 1 | BUSHING; SNAP, 2.00 INCH OD X 1.63 ID, MAX PANEL THICKNESS 0.125, BLACK NYLON |
| PNL26730 | 3 | 1 | PANEL; TOP WRAPPER, HEAT EXCHANGER, 19.59 X 12.11 |

# UNIT BASE COMPONENTS

75011721

REV A

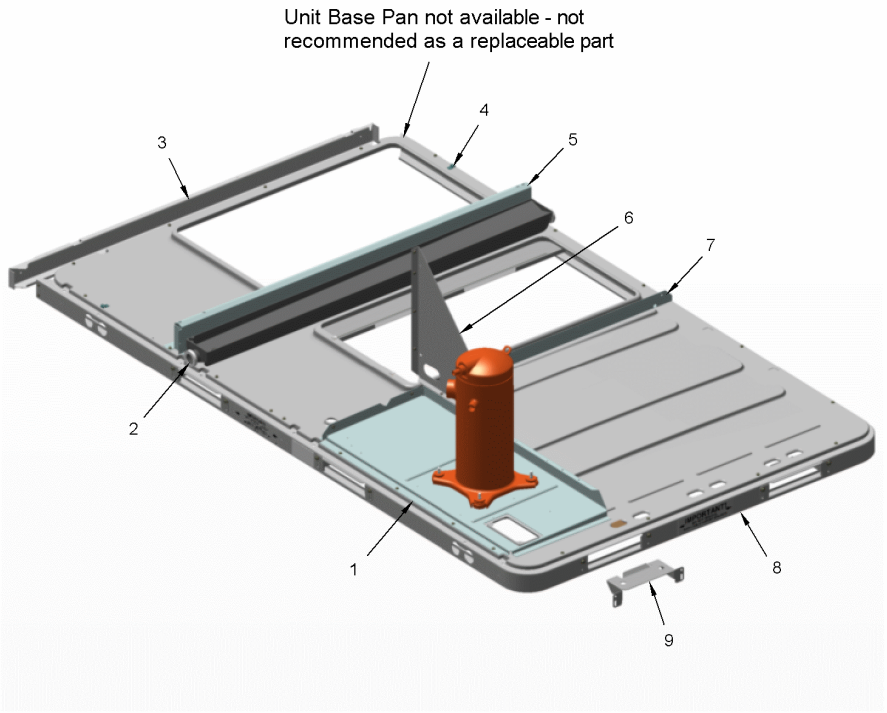


This is a typical illustration. The unit in the field may not appear exactly as shown.

| Part No. | Reference No. | Quantity | Description |
|---|---|---|---|
| PLT03619 | 1 | 1 | PLATE; MOUNTING, COMPRESSOR, 34.56 X 14.30 |
| RAL00878 | 3 | 1 | RAIL; END, 53 IN LENGTH |
| CLP01008 | 4 | 4 | NO DESCRIPTION AVAILABLE |
| SUP04486 | 5 | 1 | SUPPORT; INDOOR COIL, 51.6 INCH LENGTH |
| BRK03275 | 6 | 1 | BRACKET; COMPRESSOR SUPPORT (3 SIDES) |
| ANG01324 | 7 | 1 | ANGLE; TOGGLE LOCK, 51.00 X 1.80 |
| RAL01211 | 8 | 1 | RAIL; BASE, C/D CABINET |
| BRK03274 | 9 | 4 | BRACKET; BASE SUPPORT MOUNT, 10.3 LENGTH (FORKLIFT BRACKET) |

## BLOWER - INDOOR, PLENUM FAN

75012243

REV A

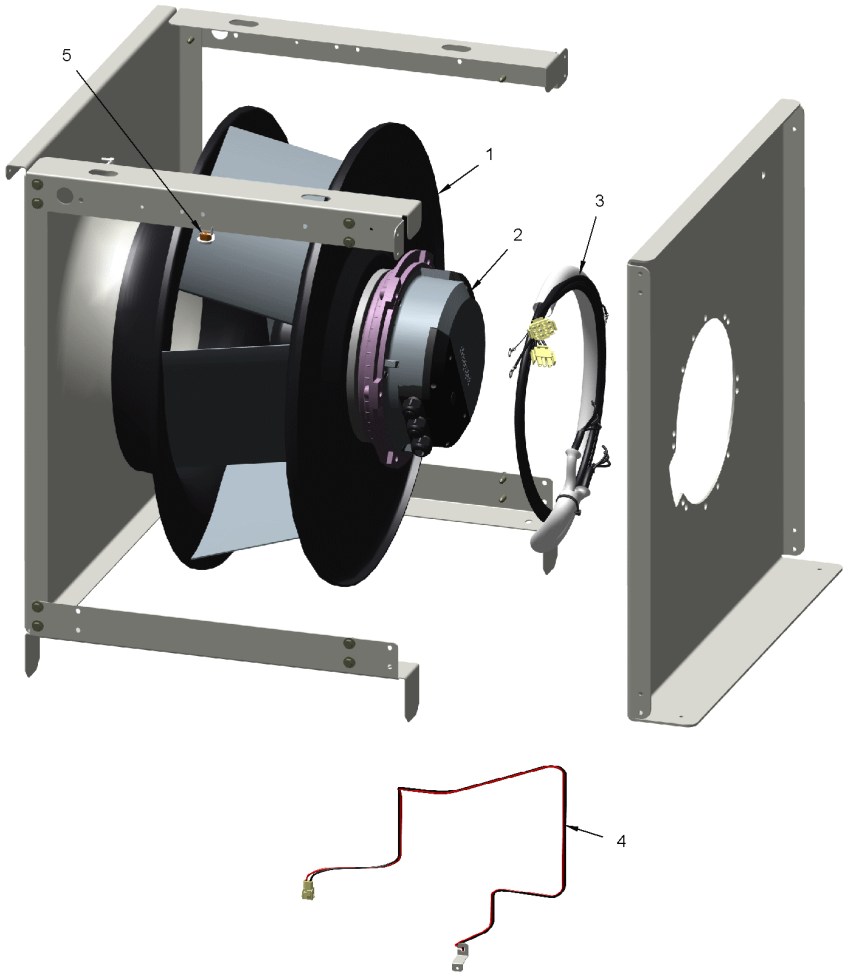


This is a typical illustration. The unit in the field may not appear exactly as shown.

| Part No. | Reference No. | Quantity | Description |
|---|---|---|---|
| SCR01421 | * | 6 | SCREW; M10 X 25 |
| SCR01557 | * | 16 | SCREW; SHEET METAL 0.25-14 X 0.62, HEX HEAD, SLATE GRAY COLOR |
| WAS00622 | * | 6 | WASHER;10MM ID X 18.1 OD |
| FAN05496 | 1 | 1 | FAN; ASSEMBLY; INDOOR PLENUM FAN; 380-480V |
| MOD02789 | 2 | 1 | MODULE; ELECTRONICS, ATTACHES TO EBM MOTOR ASSEMBLY, 460V, INCLUDES WIR05194 |
| CON00105 | 3 | 1 | CONNECTOR; HOUSING; 12 CKT SOCKET HSG MALE |
| CON00486 | 3 | 1 | CONNECTOR; PLUG HOUSING, 3 PIN MALE |
| WIR05194 | 3 | 1 | WIRE; HARNESS, INDOOR FAN MOTOR (1Z,2S,3S,GND,37B,39B,40B,41B,45B,108C,158E) |
| WIR08703 | 4 | 1 | WIRE; HARNESS, LED, WITH BRACKET |
| CNT03511 | 5 | 1 | CONTROL; LIMIT, 120F, AUTOMATIC RESET, SPST, NC, 15A/120VAC, 10A/240VAC, QC TERMINAL |

# FAN - OUTDOOR

75012613

REV
A

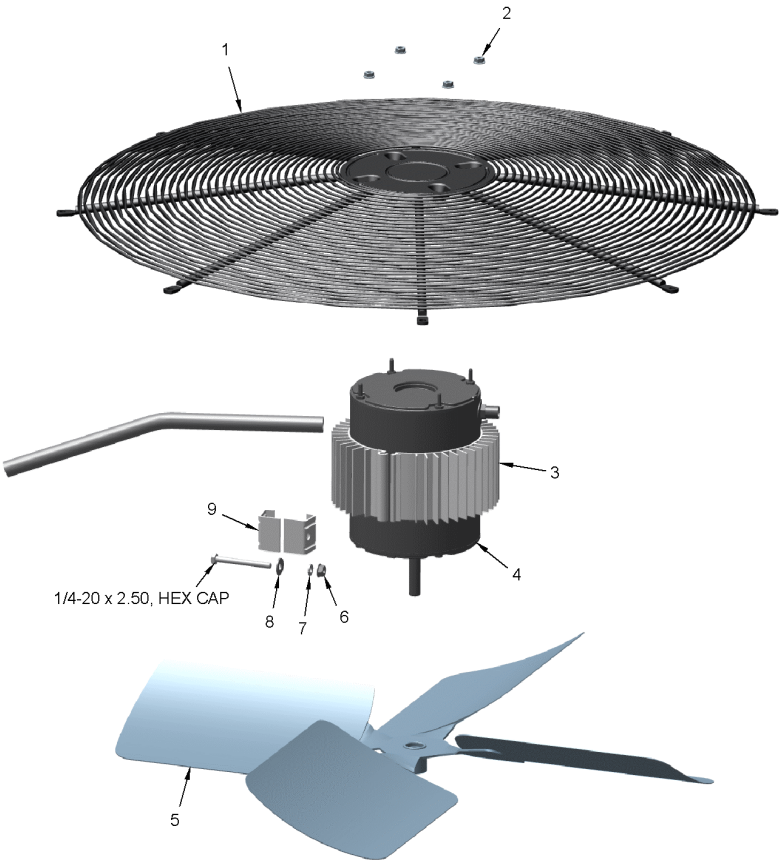


This is a typical illustration. The unit in the field may not appear exactly as shown.

| Part No. | Reference No. | Quantity | Description |
|---|---|---|---|
| GRL01353 | 1 | 1 | GRILLE; OUTDOOR FAN, 30.33 MTG DIA |
| NUT01332 | 2 | 4 | NUT; SERRATED HEX FLANGE, ZINC PLATED (IF RUBBER CAP IS NEEDED ORDER IRT00017) |
| RNG01005 | 3 | 2 | RING; EXTRUDED FIN, HEAT SINK, 3.00 WIDE, UNRESTRAINED DIM IS 7.20/6.61 |
| MOT18649 | 4 | 1 | MOTOR; AL OD MOTOR, 3 PHASE 0.7 HP, 575V |
| FAN06091 | 5 | 1 | FAN; BLADE, OD FAN - 26X4XH28/L30 - DUAL SET-SCREW |
| NUT00009 | 6 | 1 | NUT; .25-20, HEX LOCK |
| WAS00670 | 7 | 1 | WASHER; .26 ID X .49 OD |
| WAS00041 | 8 | 1 | WASHER; FLAT, PLAIN, #12 .25 ID X .56 OD, .065 THK, CARBON STL-PLD |
| BRK00688 | 9 | 2 | BRACKET; CONNECTING, HEAT SINK |

HARNESS - IDM ADAPTER 575V 75012827 REV A

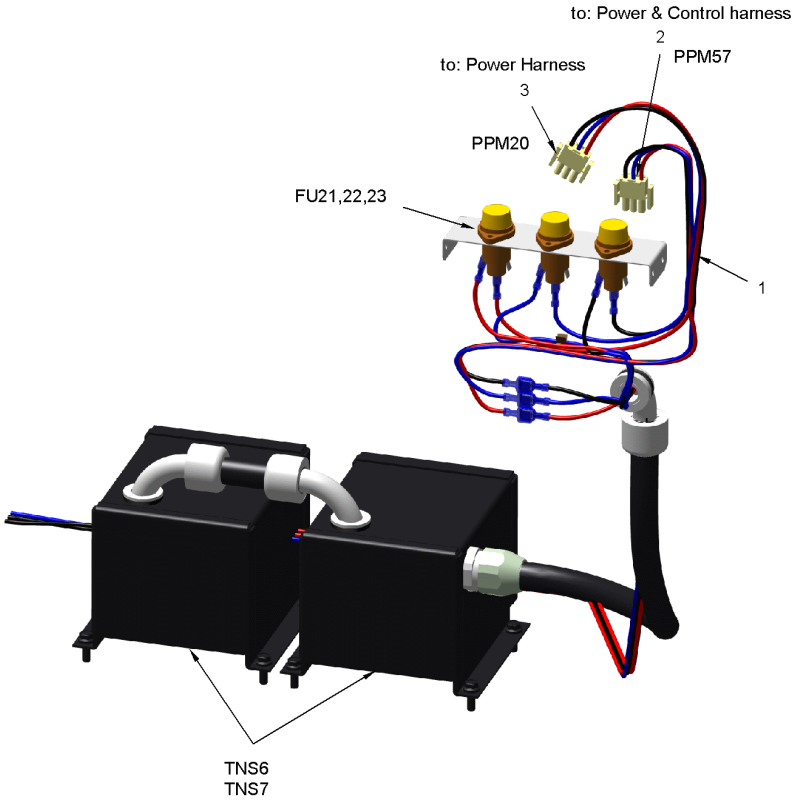


This is a typical illustration. The unit in the field may not appear exactly as shown.

| Part No. | Reference No. | Quantity | Description |
|---|---|---|---|
| WIR09245 | 1 | 1 | WIRE; HARNESS; IDM XFMR ADAPTER, 3 PHASE MOTORS |
| CON00486 | 2 | 1 | CONNECTOR; PLUG HOUSING, 3 PIN MALE |
| CON00486 | 3 | 1 | CONNECTOR; PLUG HOUSING, 3 PIN MALE |

# TERMINAL BLOCK - CONTROLS (CTB)

75011855

REV A

This assembly is a component of the Common Controls Harness

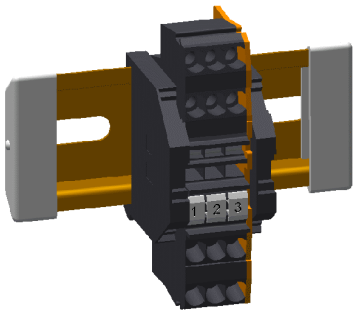


Reference - complete assembly

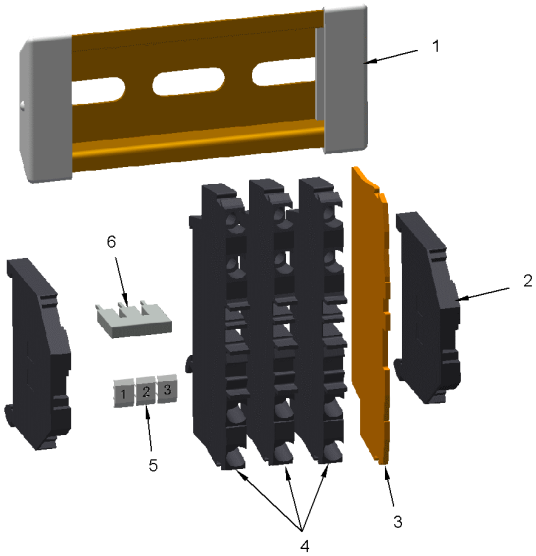


This is a typical illustration. The unit in the field may not appear exactly as shown.

| Part No. | Reference No. | Quantity | Description |
|---|---|---|---|
| CAP01251 | 1 | 2 | CAP; PROTECTIVE FORM CAP |
| TER01332 | 2 | 2 | TERMINAL; BLOCK, END STOP |
| PLT04051 | 3 | 1 | PLATE;  4 CONDUCTOR POLE END PLATE |
| TER01334 | 4 | 3 | TERMINAL; BLOCK, 4 CONDUCTOR POLE 20A 600V |
| TER01351 | 5 | 1 | TERMINAL; BLOCK, POLE MARKING 1-10 VERT |
| TER01354 | 6 | 1 | TERMINAL; BLOCK, 3 POLE JUMPER |

## COMMON CONTROLS HARNESS

75011851

REV A

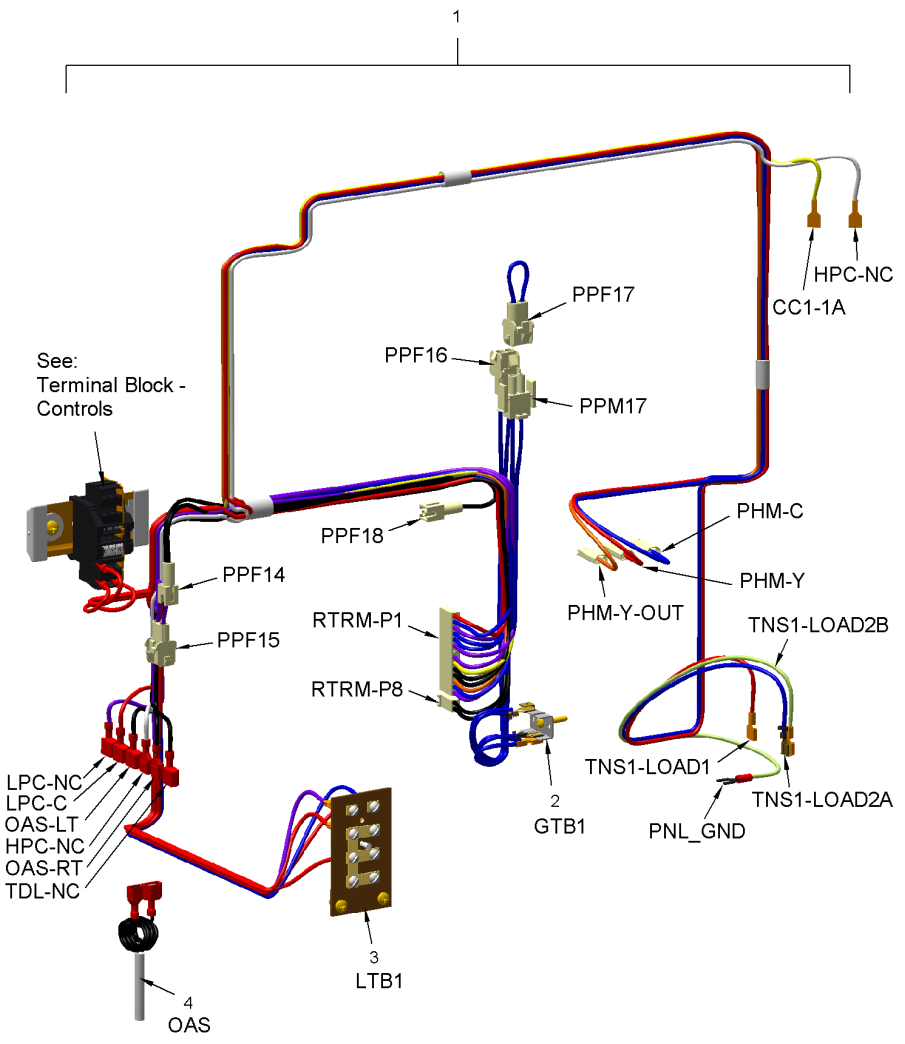


This is a typical illustration. The unit in the field may not appear exactly as shown.

| Part No. | Reference No. | Quantity | Description |
|---|---|---|---|
| WIR09263 | 1 | 1 | WIRE; HARNESS, COMMON CONTROLS, INCLUDES CTB |
| TER01680 | 2 | 1 | TERMINAL STRIP; .25IN. FASTON |
| BLK00940 | 3 | 1 | BLOCK; 6 TERMINALS (LVTB) |
| BRK04441 | 4 | 1 | BRACKET; OUTDOOR AIR SENSOR |
| GRM00039 | 4 | 1 | GROMMET; RUBBER .25 ID X .05 GRV MLD |
| SEN01829 | 4 | 1 | SENSOR; THERMISTOR PROBE, -40 TO 65C, .25 DIA X 1.75 LG W/26" PVC LEADS-INSUL QC |

# CONTROL PANEL

75012743

REV A

The parts that appear on this illustration are for all options.
Parts will appear in the Parts List if factory installed.

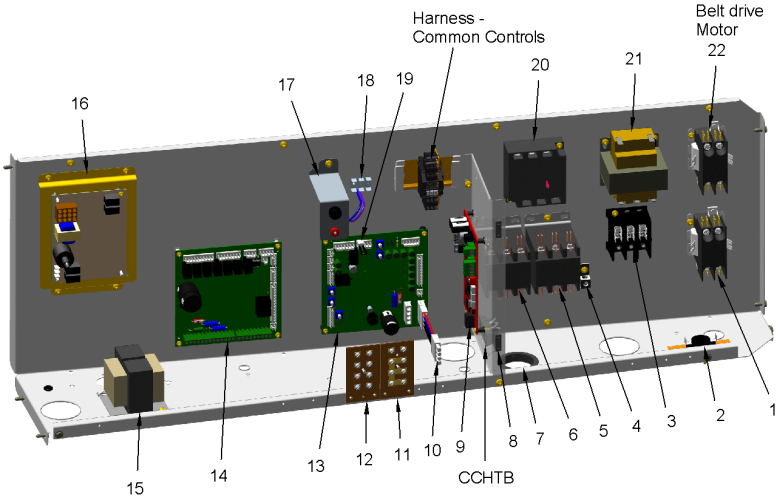


This is a typical illustration. The unit in the field may not appear exactly as shown.

| Part No. | Reference No. | Quantity | Description |
|---|---|---|---|
| WIR09230 | * | 1 | WIRE; HARNESS; C/D CAB, CNTLS, DUAL COMPRESSOR, EBM MOTOR |
| WIR09231 | * | 1 | WIRE; HARNESS; C/D CAB, CNTLS, GAS |
| WIR09236 | * | 1 | WIRE; HARNESS; C/D CAB, PWR & CNTLS, EBM PLENUM MTR, CONSTANT VOLUME |
| WIR09239 | * | 1 | WIRE; HARNESS; C/D CAB, PWR, DUAL COMP, W/ INDOOR MOTOR XFMR, INCLUDES CCHTB |
| CTR01203 | 1 | 1 | CONTACTOR; 2P, 30A, 24V COIL, 30 FLA AT 277V |
| CNT01405 | 2 | 1 | CONTROL; TEMP, OPEN 65F, CLOSE 55F, SPST |
| CON00077 | 4 | 1 | CONNECTOR, ELECTRIC GROUND, 14-2 AWG SOLDERLESS |
| CTR01870 | 5 | 1 | CONTACTOR; 3 POLE, 30 FLA, W/O LUGS, 50/60 HZ, 24V COIL |
| CTR01870 | 6 | 1 | CONTACTOR; 3 POLE, 30 FLA, W/O LUGS, 50/60 HZ, 24V COIL |
| BUS00338 | 7 | 1 | BUSHING; SNAP, 2.00 INCH OD X 1.63 ID, MAX PANEL THICKNESS 0.125, BLACK NYLON |
| CAT00043 | 8 | 2 | CATCH; MAGNETIC SNAP-IN |
| WIR03277 | 10 | 1 | WIRE; HARNESS, OPTION MODULE GENDER CHANGER. BK, BL, RD WIRES. 4 INCH LENGTH. PPM33 |
| BLK00940 | 11 | 1 | BLOCK; 6 TERMINALS (LVTB) |
| MOD02554 | 13 | 1 | MODULE; RELIATEL OPTIONS, RTOM |
| MOD02811 | 14 | 1 | MODULE; RELIATEL REFRIGERATION DUAL CIRCUIT COOL/HP |
| TRR01998 | 15 | 1 | TRANSFORMER; AUTO, 480/600V PRI, 240V SEC, 150VA |
| BRK04176 | 16 | 1 | BRACKET; IGNITION MODULE, 6.56 X 5.00 X 0.38 |
| MOD01298 | 16 | 1 | MODULE; RELIA TEL GAS DUAL STAGE W/CHASSIS GROUND |
| TER01680 | 18 | 1 | TERMINAL STRIP; .25IN. FASTON |
| WIR03278 | 19 | 1 | WIRE; HARNESS, SUPPLY AIR TEMPERING, BK WIRE, 3 INCHES LENGTH, RTOM 5J3-1 TO 5J3-2 |
| CNT05176 | 20 | 1 | CONTROL; MONITOR, 3-PHASE LINE, UNIVERSAL 180-632 VAC, PHASE AND LOSS REVERSAL |
| TRR00826 | 21 | 1 | TRANSFORMER; 75 VA, 460-575V PRI, 24V SEC |

THROUGH THE BASE ELECTRIC 75012488 REV A

The parts that appear on this illustration are for all options.
Parts will appear in the Parts List if factory installed.

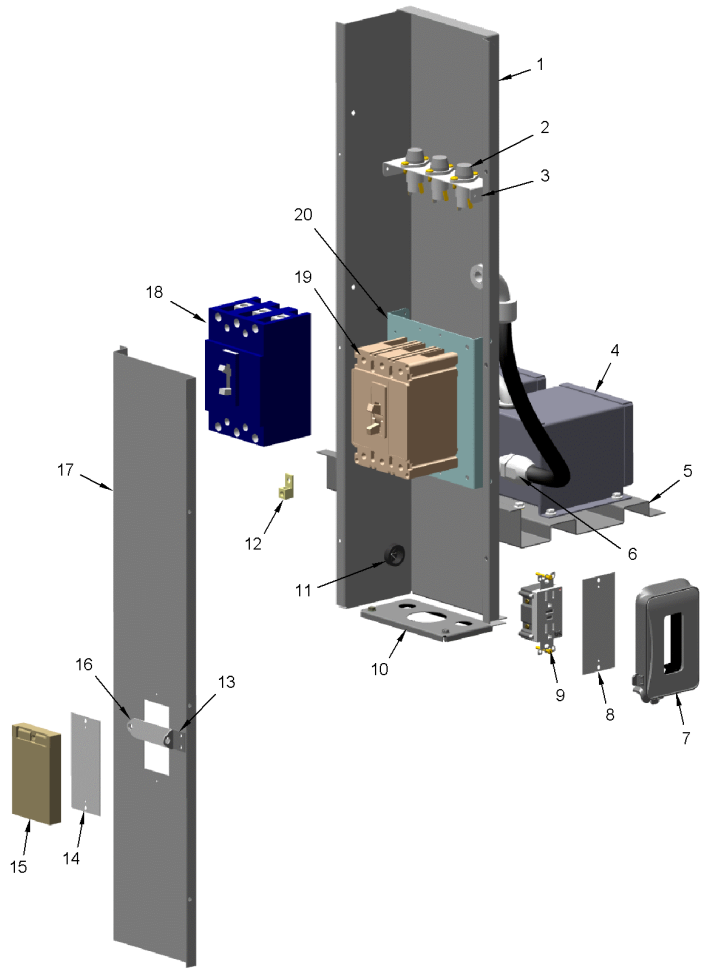


This is a typical illustration. The unit in the field may not appear exactly as shown.

| Part No. | Reference No. | Quantity | Description |
|---|---|---|---|
| PNL26820 | 1 | 1 | PANEL; TBUE ENCLOSURE, 30.29H X 7.71 X 4.5 |
| FUS01303 | 2 | 3 | FUSE; 600V, CLASS CC, 7.0 AMP, TIME DELAY |
| HLD00159 | 2 | 3 | HOLDER; FUSE |
| BRK03708 | 3 | 1 | BRACKET; TRANSFORMER FUSE HOLDER, 6.51 X 1.80 |
| TRR02230 | 4 | 2 | TRANSFORMER; SEALED, .5 KVA PRIMARY: 575 VAC, SECONDARY: 460 VAC |
| MNT02194 | 5 | 1 | MOUNT; TRANSFORMER, TBUE, 14.43 X 10.33 |
| CON00490 | 6 | 1 | CONNECTOR; 0.50 NOM STR |
| PNL14763 | 10 | 1 | PANEL; CONDUIT CONNECTION PLATE, TBUE, 6.41 X 3.33 |
| BUS00465 | 11 | 1 | BUSHING; SNAP, BLACK UNIVERSAL, 1.093 MOUNTING HOLE |
| CON00077 | 12 | 1 | CONNECTOR, ELECTRIC GROUND, 14-2 AWG SOLDERLESS |
| PNL14759 | 17 | 1 | PANEL; TBUE ENCLOSURE, FRONT, 30.40 X 6.80 |
| PNL14755 | 20 | 1 | PANEL; MOUNTING, CIRCUIT BREAKER, 7.75 X 6.51 X 1.34 |

# REFRIGERATION

75012666

REV A

## OD COIL, COMPRESSORS

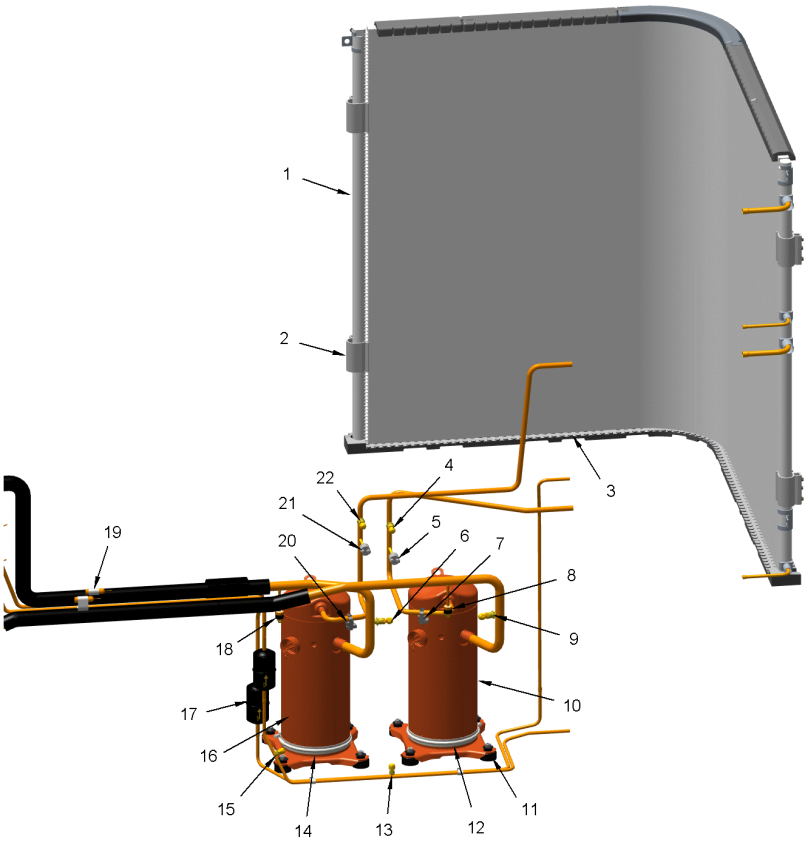


This is a typical illustration. The unit in the field may not appear exactly as shown.

| Part No. | Reference No. | Quantity | Description |
|---|---|---|---|
| WIR03437 | * | 1 | WIRE; HARNESS, COMPRESSOR, 14 AWG, CC1, 46 IN LENGTH (3 WIRE-RK,BL,BK) |
| WIR03439 | * | 1 | WIRE; HARNESS, COMPRESSOR, 14 AWG, CC2, 62 IN LENGTH (3 WIRE-RK,BL,BK) |
| RTR00990 | 2 | 4 | CLIP; MICROCHANNEL COIL MOUNTING |
| SUP06051 | 3 | 1 | SUPPORT; REAR, BETWEEN UNIT BASE AND COIL, POLYPROPYLENE, 24.96 X 2.83 |
| CAP00072 | 4 | 1 | CAP; VALVE, SEAL, .25 FFL |
| SET00819 | 4 | 1 | SEAT; SADDLE MOUNT ASSEMBLY |
| STM00803 | 4 | 1 | STEM; SADDLE MOUNT, VALVE CORE, BRASS, .344 DIA X 1.29 SCHRAEDER TYPE FITTING (TO INCLUDE 5 PIECES) |
| SWT03402 | 5 | 1 | SWITCH; HIGH PRESSURE, BRAZED, OPENS AT 650 PSIG, CLOSES AT 550 PSIG, 61 INCH WHITE LEADS |
| CAP00072 | 6 | 1 | CAP; VALVE, SEAL, .25 FFL |
| SET00819 | 6 | 1 | SEAT; SADDLE MOUNT ASSEMBLY |
| STM00803 | 6 | 1 | STEM; SADDLE MOUNT, VALVE CORE, BRASS, .344 DIA X 1.29 SCHRAEDER TYPE FITTING (TO INCLUDE 5 PIECES) |
| THT02760 | 7 | 1 | THERMOSTAT; WITH CLIP, .5/.625 TUBE, 72" BLACK WIRES, SPST, 230F OPEN, 180F CLOSE |
| SWT03623 | 8 | 1 | SWITCH; LOW PRESSURE CUTOUT, 250 OPEN, ACTUATION PRESSURE 55 +/- 5, RESET PRESSURE 35 +/- 5 |
| WIR04406 | 8 | 1 | WIRE; HARNESS, LOW PRESSURE SWITCH, 42 IN LENGTH, BLUE WIRES, CIR 1 |
| CAP00072 | 9 | 1 | CAP; VALVE, SEAL, .25 FFL |
| SET00819 | 9 | 1 | SEAT; SADDLE MOUNT ASSEMBLY |
| STM00803 | 9 | 1 | STEM; SADDLE MOUNT, VALVE CORE, BRASS, .344 DIA X 1.29 SCHRAEDER TYPE FITTING (TO INCLUDE 5 PIECES) |
| COM10214 | 10 | 1 | COMPRESSOR; SCROLL, SXA061B7BPZ, 5.0 TON, 575/60/3, R410A |
| ISR00007 | 11 | 8 | ISOLATOR; VIBRATION |
| NUT00355 | 11 | 8 | NUT; HEX, LOCK, 5/16IN.-18 |
| HTR06512 | 12 | 1 | HEATER; CRANKCASE, 70W, 575V (56W AT 460V), 6.5 DIA, 65/46 IN LEAD LENGTHS |
| CAP00072 | 13 | 1 | CAP; VALVE, SEAL, .25 FFL |
| COR00006 | 13 | 1 | CORE; VALVE PORT, .79 LENGTH, .206-36 UNS 2A THD |
| VAL01483 | 13 | 1 | VALVE; BODY, .44-20 THD X .25 ODS, STRAIGHT, BRASS, LESS CORE |
| HTR03909 | 14 | 1 | HEATER; CRANKCASE, 40W, 575V, 6.5 DIA, 70 IN LEAD LENGTHS (32W AT 460V) |
| CAP00072 | 15 | 1 | CAP; VALVE, SEAL, .25 FFL |
| COR00006 | 15 | 1 | CORE; VALVE PORT, .79 LENGTH, .206-36 UNS 2A THD |
| VAL01483 | 15 | 1 | VALVE; BODY, .44-20 THD X .25 ODS, STRAIGHT, BRASS, LESS CORE |
| COM10209 | 16 | 1 | COMPRESSOR; SCROLL, SXA039B7BPZ, 3.25 TON, 575/60/3, R410A |
| DHY01511 | 17 | 2 | DRIER; FILTER, LIQUID LINE, 5/16 ODM INLET X 5/16 ODF OUTLET, 8 CU INCH |
| SWT03173 | 18 | 1 | SWITCH; LOW PRESSURE CUTOUT, 250 OPEN, ACTUATION PRESSURE 41 +/- 4, RESET PRESSURE 25 +/- 4 |
| WIR04407 | 18 | 1 | WIRE; HARNESS, LOW PRESSURE SWITCH, 55 IN LENGTH, YELLOW WIRES, CIR 2 |
| CLP01073 | 19 | 2 | CLIP; BULB (RED) |
| THT02761 | 20 | 1 | THERMOSTAT; WITH CLIP, .5/.625 TUBE, 72" RED WIRES, SPST, 230F OPEN, 180F CLOSE |
| SWT03403 | 21 | 1 | SWITCH; HIGH PRESSURE, BRAZED, OPENS AT 650 PSIG, CLOSES AT 550 PSIG, 61 INCH ORANGE LEADS |
| CAP00072 | 22 | 1 | CAP; VALVE, SEAL, .25 FFL |
| SET00819 | 22 | 1 | SEAT; SADDLE MOUNT ASSEMBLY |
| STM00803 | 22 | 1 | STEM; SADDLE MOUNT, VALVE CORE, BRASS, .344 DIA X 1.29 SCHRAEDER TYPE FITTING (TO INCLUDE 5 PIECES) |

# HEAT EXCHANGER

75012465

REV
A

All parts are included with #1, except the TCO1 Plug #2.

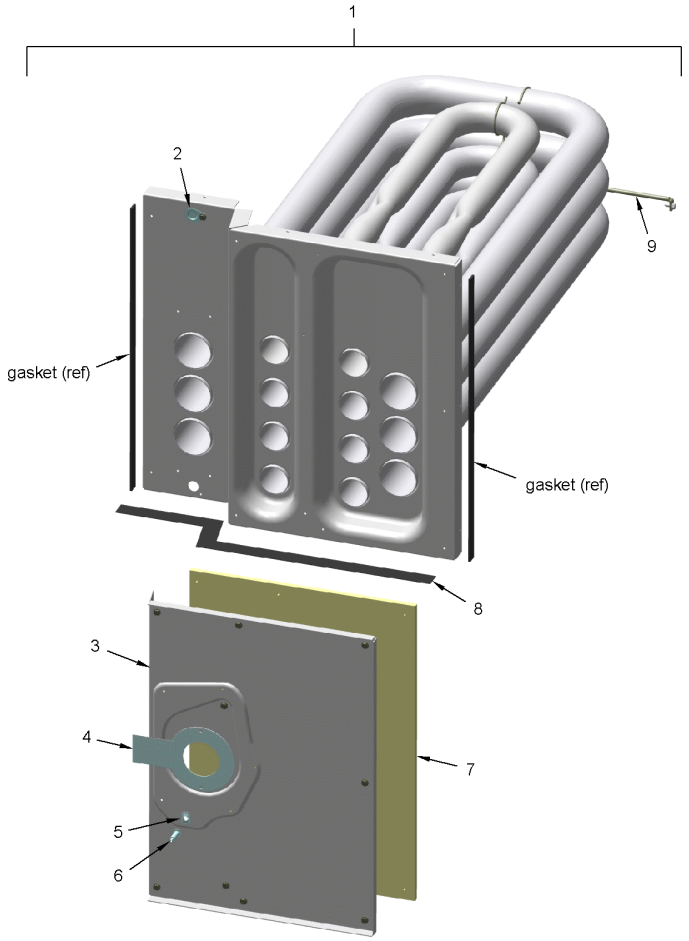


This is a typical illustration. The unit in the field may not appear exactly as shown.

| Part No. | Reference No. | Quantity | Description |
|---|---|---|---|
| TRB00119 | * | 5 | TURBULATOR; INLET, 12 INCH, INCLUDES WIR04279 WIRE SUPPORT |
| EXC02211 | 1 | 1 | EXCHANGER; HEAT |
| PLU01294 | 2 | 1 | PLUG; GAS HEAT TC01 |
| ORF01424 | 4 | 1 | ORIFICE; AIR, 2.9 INCH, ALUMINUM |
| WEL00848 | 5 | 1 | WELL; BULB, TAP, STATIC, 1.0 LENGTH X 0.50 OD X 0.281 OD X 0.125 ID |
| CLP00940 | 6 | 1 | CLIP; STATIC, RETAINER, .80 X .56 X .022 |
| INS02777 | 7 | 1 | INSULATION; COLLECTOR COVER, 18.75 X 13.48 X 0.34, ALUMINUM/SILICONE |
| GKT03926 | 8 | 1 | GASKET; HEAT EXCHANGER VESTIBULE, FIBERGLASS REINFORCED, 19.69 X .125 |
| ROD01137 | 9 | 1 | ROD; SUPPORT, 20 INCHES |

BURNER 75012435 REV A

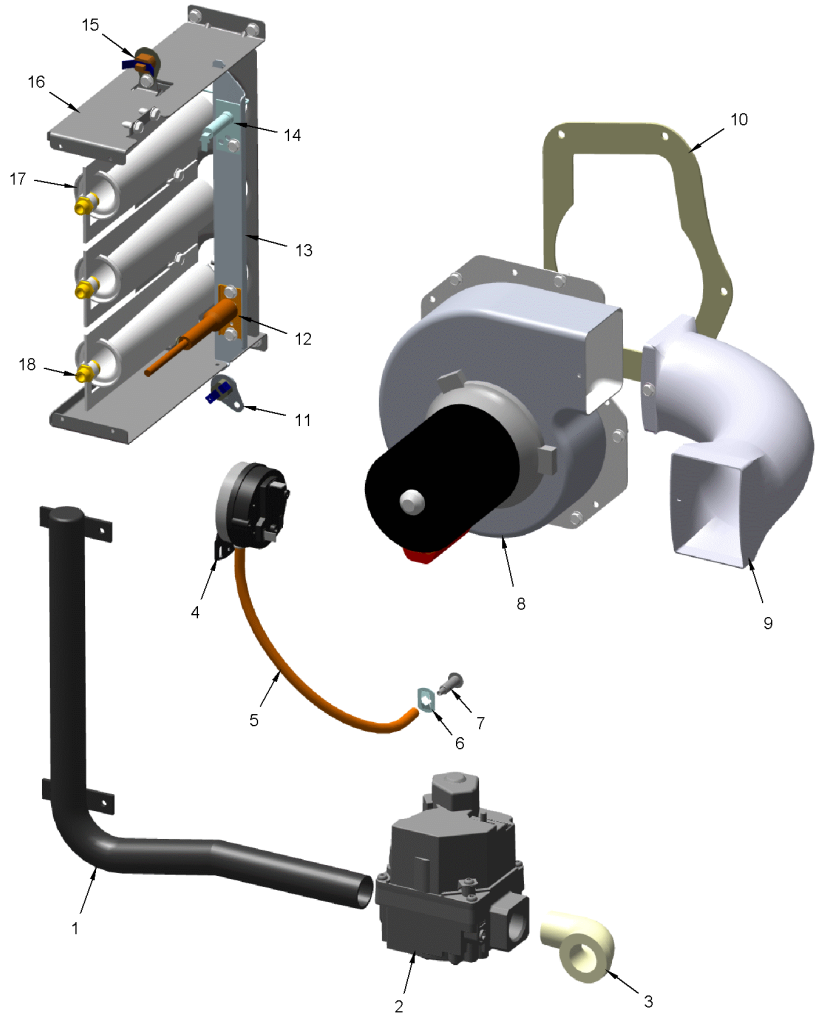


This is a typical illustration. The unit in the field may not appear exactly as shown.

| Part No. | Reference No. | Quantity | Description |
|---|---|---|---|
| CNT03787 | * | 1 | CONTROL; LIMIT, 260F, AUTOMATIC RESET, SPST, NC, 15A/120VAC, 10A/240VAC, QC TERMINAL |
| WIR08872 | * | 1 | WIRE; HARNESS, GAS VALVE ADAPTER, BR,BL,BR WIRES, 5 INCH LENGTH, 3 PIN CONNECTOR |
| MFD00995 | 1 | 1 | MANIFOLD; GAS, 3/4/X 5 BURNER |
| VAL08750 | 2 | 1 | VALVE; GAS, NATURAL, 2 STAGE, 24 VAC, 50/60 HZ, .4 AMP REDUNDANT, INLET OUTLET 3/4 X 3/4-14 NPT, MAX OP PRESSURE .5 PSIG |
| ELL00030 | 3 | 1 | ELBOW; .75, 90 DEG ST, 150# MI |
| CNT03666 | 4 | 1 | CONTROL; DIFFERENTIAL PRESSURE SWITCH, ROTATED 180 DEG, SPST, SNAP ACTING CONTACTS, NO, 5 AMP RESISTIVE AT 24 VAC |
| TUB10506 | 5 | 1 | TUBE; CONNECTING PRESSURE, SILICON RUBBER, .19 ID X .06W, 12.50 IN |
| CLP00940 | 6 | 2 | CLIP; STATIC, RETAINER, .80 X .56 X .022 |
| WEL00848 | 7 | 1 | WELL; BULB, TAP, STATIC, 1.0 LENGTH X 0.50 OD X 0.281 OD X 0.125 ID |
| FAN04216 | 8 | 1 | FAN; 2 SPEED COMBUSTION AIR BLOWER, 1/15 HP MOTOR, 208-230/50-60/1, 2800/3350 RPM, .50/.42 AMPS, WHEEL SIZE 4.72 DIA OD |
| DUC01040 | 9 | 1 | DUCT; FLUE EXHAUST, ALUMINUM COATED WELDED STEEL TUBING |
| GKT03850 | 10 | 1 | GASKET; COMBUSTION BLOWER |
| CNT04671 | 11 | 1 | CONTROL; LIMIT, 190F, AUTOMATIC RESET, SPST, NC, 15A/120VAC, 10A/240VAC, QC TERMINAL |
| IGN00114 | 12 | 1 | IGNITOR; ELECTRODE, 57 IN LEAD |
| BRK04324 | 13 | 1 | BRACKET; IGNITOR AND FLAME SENSOR, 15.3 X 1.1 |
| SEN00297 | 14 | 1 | SENSOR; FLAME |
| SWT02649 | 15 | 1 | SWITCH; FLAME ROLLOUT, 240F, OPENS ON TEMP RISE, MANUAL RESET, SPST, 25A/240V QC TERMINAL |
| BRK04320 | 16 | 1 | BRACKET; GAS 5-BURNER SUPPORT, 8.50 X 2.53 X 15.16 |
| BNR01071 | 17 | 5 | BURNER; 0.60 ID INSHOT BURNER, 0.036 THK 304 STAINLESS STEEL |
| ORF01342 | 18 | 5 | ORIFICE; GAS, SPUD, 3.3 MM DIA |

INDOOR COIL 75012667 REV A

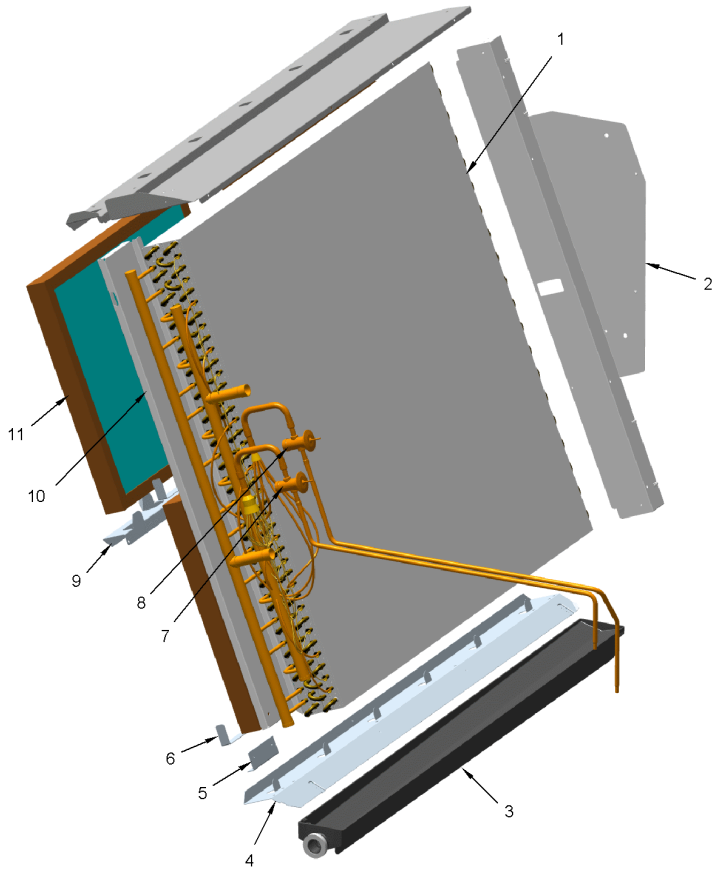


This is a typical illustration. The unit in the field may not appear exactly as shown.

| Part No. | Reference No. | Quantity | Description |
|---|---|---|---|
| DST00945 | * | 1 | DISTRIBUTOR; ASSEMBLY, INDOOR, 12 OUTLETS, #4 NOZZLE |
| DST00946 | * | 1 | DISTRIBUTOR; ASSEMBLY, 8 OUTLETS, #2.5 NOZZLE |
| COL18122 | 1 | 1 | COIL; INDOOR, 4 ROW, 40H X 44.5L |
| BRK03097 | 2 | 1 | BRACKET; FILTER STOP, 40.00 X 3.00 |
| BOF02311 | 4 | 1 | BLOCKOFF; INDOOR COIL BOTTOM, 51.44 X 2.65 X 2.15 |
| BRK03234 | 5 | 1 | BRACKET; INDOOR COIL, BOTTOM, 0.65 X 4.39 X 1.50 |
| VAL10373 | 7 | 1 | VALVE; EXPANSION, 6 TON, 3/8 ODF IN X 1/2 ODF OUT, NON-ADJUSTABLE, R410A, 127.0 PSIG |
| VAL10371 | 8 | 1 | VALVE; EXPANSION, 4 TON, 3/8 ODF IN X 1/2 ODF OUT, NON-ADJUSTABLE, R410A, 124.8 PSIG |
| BRK03938 | 9 | 1 | BRACKET; FILTER CHANNEL, 50.50 LENGTH |
| BOF01684 | 10 | 1 | BLOCKOFF; INDOOR COIL, FRONT, 40.6 X 5.5 |

| Part No. | Reference No. | Quantity | Description |
|---|---|---|---|
| ASYSTAT712B | * | 1 | SENSOR; CO2 SENSING KIT; WALL MOUNTED (ASYSTAT712B) |
| ASYSTAT714B | * | 1 | SENSOR; CO2 SENSING KIT; DUCT MOUNTED (ASYSTAT714B) |
| BAYABRD001C | * | 1 | KIT; ACCESSORY, OPTIONS BOARD (BAYABRD001CA) |
| BAYBARM011A | * | 1 | DAMPER; BAROMETRIC RELIEF (BAYBARM011AB) |
| BAYBCIR001A | * | 1 | KIT; FIELD INSTALLED BCI (BAYBCIR001A) |
| BAYCO2K101A | * | 1 | KIT; WALL MOUNT CO2 SENSOR KIT |
| BAYCO2K103A | * | 1 | KIT;DUCT MOUNT CO2 SENSOR KIT |
| BAYCURB043A | * | 1 | CURB; ROOFCURB (BAYCURB043AB) |
| BAYDFPS004A | * | 1 | KIT; FAN FAILURE SWITCH (BAYDFPS004AB). (OPTIONS BOARD KIT09433-BAYABRD001CA MUST BE INSTALLED IN THE UNIT FOR THIS ACCESSORY TO OPERATE). |
| BAYDMPR054A | * | 1 | DAMPER; RELIATEL, 0-50 PERCENT MOTORIZED OUTSIDE AIR DAMPER (BAYDMPR054A) |
| BAYDMPR056B | * | 1 | DAMPER; 0-50% MANUAL OUTSIDE AIR DAMPER (BAYDMPR056BA) |
| BAYECON087A | * | 1 | ECONOMIZER; RELIATEL, 0-100 PERCENT DRY BULB (BAYECON087A) |
| BAYECON704A | * | 1 | ACCESSORY; LOW LEAK ECONOMIZER, FOR C/D/E CABINETS WITH RELIATEL CONTROLS (SEE ACC-SVN177* FOR MODELS) |
| BAYENTH005A | * | 1 | KIT; REFERENCE ENTHALPY (BAYENTH005A) |
| BAYENTH006B | * | 1 | KIT; COMPARATIVE ENTHALPY (BAYENTH006B) |
| BAYHAKT010E | * | 1 | KIT; ACCESSORY, HIGH ALTITUDE |
| BAYHSDR012A | * | 1 | KIT; HIGH STATIC DRIVE (BAYHSDR012AA) |
| BAYICSI003A | * | 1 | BOARD; ACCESSORY, RELIATEL COMMUNICATIONS INTERFACE BOARD (BAYICSI003AD) |
| BAYLOAM020B | * | 1 | CONTROL; EVAPORATOR DEFROST KIT (FROSTAT) (BAYLOAM020BB). (OPTIONS BOARD KIT09433-BAYABRD001CA MUST BE INSTALLED IN THE UNIT FOR THIS ACCESSORY TO OPE |
| BAYLPKT029C | * | 1 | KIT; LP CONVERSION (BAYLPKT029C) |
| BAYLTCI002B | * | 1 | KIT; RELIATEL COMMUNICATIONS INTERFACE THAT INCORPORATES LONTALK PROTOCAL (BAYLTCI002BB) |
| BAYPWRX028A | * | 1 | POWER EXHAUST; 575V, 6-10 TON PRECEDENT |
| BAYQACB011A | * | 1 | CURB; ADAPTA CURB (BAYQACB011AA), TRANSITIONS BAYCURB022B, 83.50 X 49.375 |
| BAYQACB012A | * | 1 | CURB; ADAPTA CURB (BAYQACB012AA), TRANSITIONS BAYCURB025B, 90.50 X 60.625 |
| BAYQACB013A | * | 1 | CURB; ADAPTA CURB (BAYQACB013AA), TRANSITIONS BAYCURB026B, 103.375 X 68.125 |
| BAYQACB114A | * | 1 | QUICK ADAPTER ROOF CURB |
| BAYRTEM001A | * | 1 | RELIATEL ECONOMIZER LOGIC MODULE |
| BAYSENS050A | * | 1 | WIRELESS ZONE SENSOR |
| BAYSENS250A | * | 1 | CO2 SENSOR |
| BAYSENS251A | * | 1 | SENSOR; CO2 WALL MOUNT (BAYSENS251A) |
| BAYSENS924A | * | 1 | SENSOR, TOUCH SCREEN, PROGRAMMABLE SPACE, RELIATEL |
| BAYSTAT023A | * | 1 | RESISTOR; REMOTE POTENTIOMETER |
| BAYTUBE400A | * | 1 | DISCHARGE AIR SENSING KIT; GAS HEAT |
| BAYVNOR001B | * | 1 | KIT; VENTILATION OVERIDE (BAYVNOR001BB) (OPTIONS BOARD KIT09433-BAYABRD001CA MUST BE INSTALLED IN THE UNIT FOR THIS ACCESSORY TO OPERATE). |
| PLT04561 | * | 1 | PLATE; WALL COVER PLATE ASSEMBLY (BAYMTPL110A) |
| SEN00278 | * | 1 | SENSOR; THERMISTOR PROBE, -40 DEG C TO 65 DEG, STRIPPED LEADS (BAYSENS016AA) |
| SEN01447 | * | 1 | SENSOR; ZONE, ROOM SENSOR W/TEMP. ADJUSTMENT WITH OVERRIDE AND CANCEL BUTTONS, 10K, DIAL, OCCUPIED (BAYSENS074AA) |
| SEN01448 | * | 1 | SENSOR; ZONE, REMOTE ROOM SENSOR, 10K (BAYSENS077AA) |
| SEN01450 | * | 1 | SENSOR; ZONE, ROOM SENSOR W/ OVERRIDE AND CANCEL BUTTONS, 10K, OCCUPIED (BAYSENS073AA) |
| SEN01513 | * | 1 | SENSOR; ZONE; DUAL SETPOINT MANUAL OR AUTO CHANGOVER, TWO SET FAN SYSTEM (BAYSENS108AA) |
| SEN01515 | * | 1 | SENSOR;ZONE SINGLE SETPOINT MANUAL CHANGEOVER, SET FAN SYSTEM, COOL/OFF/HEAT (BAYSENS106A) |

| Part No. | Reference No. | Quantity | Description |
|---|---|---|---|
| SEN01522 | * | 1 | SENSOR; ZONE, DUAL SETPOINT MANUAL OR AUTO CHANGEOVER W/SYSTEM FUNCTION LIGHTS TWO SET FAN SYSTEM, LED (BAYSENS110A) |
| SEN01577 | * | 1 | SENSOR; PROGRAMMABLE ZONE, AUTOMATIC OR MANUAL CHANGEOVER W/ SYSTEM LIGHTS TRANE (BAYSENS119AA) |
| SEN01665 | * | 1 | SENSOR; DUAL SETPOINT, W/FAN CONTROL - AUTO/HIGH (BAYSENS135A) |
| TOL00099 | * | 1 | TOOL; RESISTANCE DECADE BOX |

# MODEL NUMBER DESCRIPTION

75012767

REV A

DX Cooling / DX Cooling, Gas Heat / Pkg Heat Pump

*Example Model Number:*

**YSC092H3RZA00C6C2A1A000DEA11AD1**

1 - - - 5 - - - - 10 - - - - 15 - - - - 20 - - - - 25 - - - - 30 -

**Digit 17 – Condenser Coil Protection**
- 0 = Standard Coil
- 1 = Standard Coil with Hail Guard
- 2 = Black Epoxy Condenser Coil Guard
- 3 = Black Epoxy Condenser Coil with Hail Guard
- 4 = CompleteCoat Condenser Coil
- 5 = CompleteCoat Condenser Coil with Hail Guard

**Digit 18 – Through the Base Option**
- 0 = No Through-the-Base Provisions
- A = Through-the-Base Electric
- B = Through-the-Base Gas Piping
- C = Through-the-Base Electric and Gas Piping

**Digit 19 – Disconnect/Circuit Breaker**
- 0 = No Disconnect/No Circuit Breaker
- 1 = Unit Mounted Non-Fused Disconnect
- 2 = Unit Mounted Circuit Breaker

**Digit 20 – Convenience Outlet**
- 0 = Convenience Outlet
- A = Unpowered Convenience Outlet
- B = Powered Convenience Outlet

**Digit 21 – Communications Options**
- 0 = No Communications Interface
- 1 = Trane® Communications Interface
- 2 = LonTalk® Communications Interface
- 6 = BACnet® Communications Interface
- 7 = Air-Fi™ Wireless Communications Interface

**Digit 22 – Refrigeration System Option**
- 0 = Standard Refrigeration System

**Digit 23 – Refrigeration Controls**
- 0 = Without Refrigeration Controls
- 1 = Frostat™

**Digit 24 – Smoke Detector**
- 0 = No Smoke Detector
- A = Return Air Smoke Detector
- B = Supply Air Smoke Detector
- C = Supply and Return Air Smoke Detectors
- D = Plenum Smoke Detector

**Digit 25 – System Monitoring Controls**
- 0 = Standard Monitoring System
- 1 = Clogged Filter Switch
- 2 = Fan Failure Switch
- 3 = Discharge Air Sensing Tube
- 4 = Clogged Filter Switch and Fan Failure Switch
- 5 = Clogged Filter Switch and Discharge Air Sensing Tube
- 6 = Fan Failure Switch and Discharge Air Sensing Tube
- 7 = Clogged Filter Switch, Fan Failure Switch and Discharge Air Sensing Tube
- A = Condensate Drain Pan Overflow Switch
- B = Clogged Filter Switch and Condensate Drain Pan Overflow Switch
- C = Fan Failure Switch and Condensate Drain Pan Overflow Switch
- D = Discharge Air Sensing Tube and Condensate Drain Pan Overflow Switch
- E = Clogged Filter Switch, Fan Failure Switch and Condensate Drain Pan Overflow Switch
- F = Clogged Filter Switch,Discharge Air Sensing Tube and Condensate Drain Pan Overflow Switch
- G = Fan Failure Switch, Discharge Air Sensing Tube and Condensate Drain Pan Overflow Switch
- F = Clogged Filter Switch,Fan Failure Switch, Discharge Air Sensing Tube and Condensate Drain Pan Overflow Switch

**Digit 26 – System Monitoring Controls**
- 0 = No Monitoring Controls
- A = Demand Control Ventilation ($CO_2$)
- B = Low Leak Economizer with FDD (Fault Detection & Diagnostics)
- C = FDD (Fault Detection & Diagnostics) with DCV (Demand Control Ventilation)

**Digits 27 – Unit Hardware Enhancements**
- 0 = No Enhancements
- 1 = Stainless Steel Drain Pan

**Digit 31 – Advanced Unit Controls**
- 0 = Standard Unit Controls
- 1 = Human Interface

# MODEL NUMBER DESCRIPTION

75012766

REV A

DX Cooling / DX Cooling, Gas Heat / Pkg Heat Pump

*Example Model Number:*

**YSC092H3RZA00C6C2A1A000DEA11A0D1**

1 - - - 5 - - - - 10 - - - - 15 - - - - 20 - - - - 25 - - - - 30 -

**Digit 1 – Unit Type**
D = Dual Fuel Heat Pump
T = DX Cooling
W = Packaged Heat Pump
Y = DX Cooling, Gas Heat

**Digit 2 – Efficiency**
S = Standard Efficiency
H = High Efficiency

**Digit 3 – Airflow**
C = Convertible

**Digits 4,5,6 – Nominal Gross Cooling Capacity (MBh)**
072 = 6 Ton
074 = 6 Ton
090 = 7.5 Ton
092 = 7.5 Ton
102 = 8.5 Ton
120 = 10 Ton

**Digit 7 – Major Design Sequence**
H = Major Design Sequence

**Digit 8 – Voltage Selection**
3 = 208-230/60/3
4 = 460/60/3
W = 575/60/3

**Digit 9 – Unit Controls**
E = Electromechanical
R = ReliaTel™ Microprocessor

**Digit 10 – Heating Capacity**
***Note:*** *Applicable to Digit 1, T or W models only*
0 = No Electric Heat
C = 9 kW
G = 18 kW
K = 27 kW
N = 36 kW
P = 54 kW
***Note:*** *Applicable to Digit 1, D or Y models only*
L = Low Heat
M = Medium Heat
H = High Heat
X = Low Heat, Stainless Steel Heat Exchanger
Y = Medium Heat, Stainless Steel Heat Exchanger
Z = High Heat, Stainless Steel Heat Exchanger

**Digit 11 – Minor Design Sequence**
A = First Sequence

**Digits 12, 13 – Service Sequence**
** = Factory Assigned

**Digit 14 – Fresh Air Selection**
0 = No Fresh Air
A = Manual Outside Air Damper 0-50%
B = Motorized Outside Air Damper 0-50%
C = Economizer, Dry Bulb 0-100% without Barometric Relief
D = Economizer, Dry Bulb 0-100% with Barometric Relief
E = Economizer, Reference Enthalpy 0-100% without Barometric Relief
F = Economizer, Reference Enthalpy 0-100% with Barometric Relief
G = Economizer, Comparative Enthalpy 0-100% without Barometric Relief
H = Economizer, Comparative Enthalpy 0-100% with Barometric Relief
K = Low Leak Economizer with Barometric Relief
M = Low Leak Economizer with Reference Enthalpy with Barometric Relief
P = Low Leak Economizer with Comparative Enthalpy with Barometric Relief

**Digits 15 – Supply Fan/Drive Type/Motor**
0 = Standard Drive
1 = Oversized Motor
6 = Single Zone VAV
7 = Multi-Speed Indoor Fan
E = Multi-Zone Variable Air Volume

**Digit 16 – Hinged Service Access/Filters**
0 = Standard Panels/Standard Filters
A = Hinged Access Panels/Standard Filters
B = Standard Panels/2" MERV 8 Filters
C = Hinged Access Panels/2" MERV 8 Filters
D = Standard Panels/2" MERV 13 Filters
E = Hinged Access Panels/2" MERV 13 Filters