PACKAGED GAS/ELECTRIC

75012685

REV A

The sections that appear on this illustration are for all options.
Sections and options will appear in the Parts List if factory installed

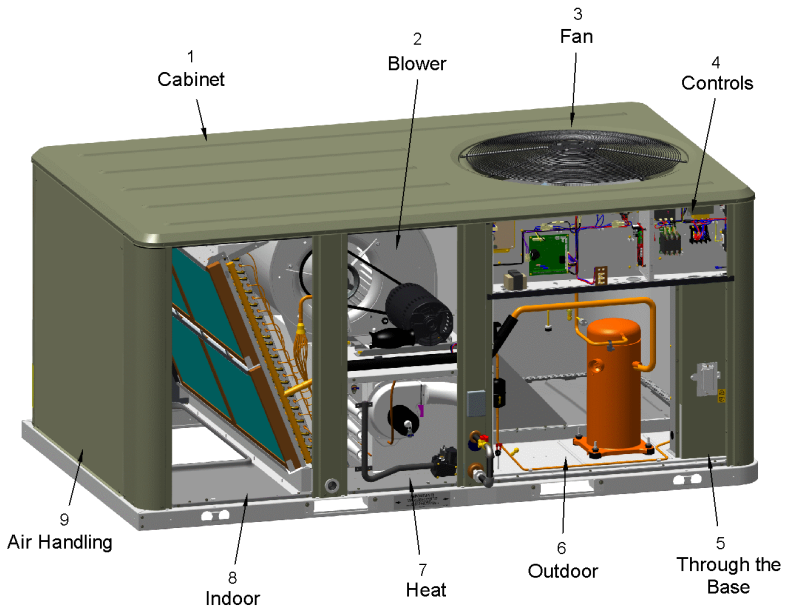

This is a typical illustration. The unit in the field may not appear exactly as shown.

Part No.	Reference No.	Quantity	Description
75011721	1		UNIT BASE COMPONENTS
75012614	2		BLOWER
75012613	3		FAN - OUTDOOR
75012742	4		CONTROL PANEL
75012825	4		HARNESS - POWER
75012826	4		WIRE; HARNESS; C/D CAB, PWR & CNTLS, BELT DRIVE MOTOR
75012686	6		REFRIGERATION
75012435	7		BURNERS, GAS VALVE, INDUCER, FD,FR, IP, TCO
75012465	7		HEAT EXCHANGER
NGRAPHIC	10		OPTIONAL FIELD INSTALLED ACCESSORIES
75012766	11		MODEL NUMBER DESCRIPTION, DIGITS 1-16
75012767	11		MODEL NUMBER DESCRIPTION, DIGITS 17-31

UNIT BASE COMPONENTS

75011721

REV
A

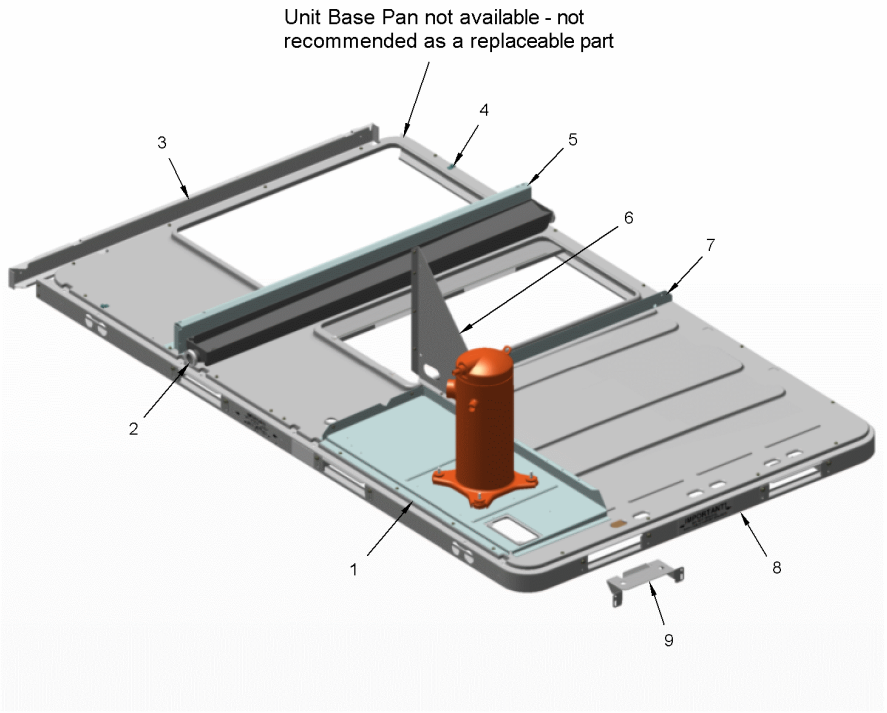

This is a typical illustration. The unit in the field may not appear exactly as shown.

Part No.	Reference No.	Quantity	Description
PLT03619	1	1	PLATE; MOUNTING, COMPRESSOR, 34.56 X 14.30
RAL00878	3	1	RAIL; END, 53 IN LENGTH
CLP01008	4	4	NO DESCRIPTION AVAILABLE
SUP04486	5	1	SUPPORT; INDOOR COIL, 51.6 INCH LENGTH
BRK03275	6	1	BRACKET; COMPRESSOR SUPPORT (3 SIDES)
ANG01324	7	1	ANGLE; TOGGLE LOCK, 51.00 X 1.80
RAL01211	8	1	RAIL; BASE, C/D CABINET
BRK03274	9	4	BRACKET; BASE SUPPORT MOUNT, 10.3 LENGTH (FORKLIFT BRACKET)

BLOWER 75012614 REV A

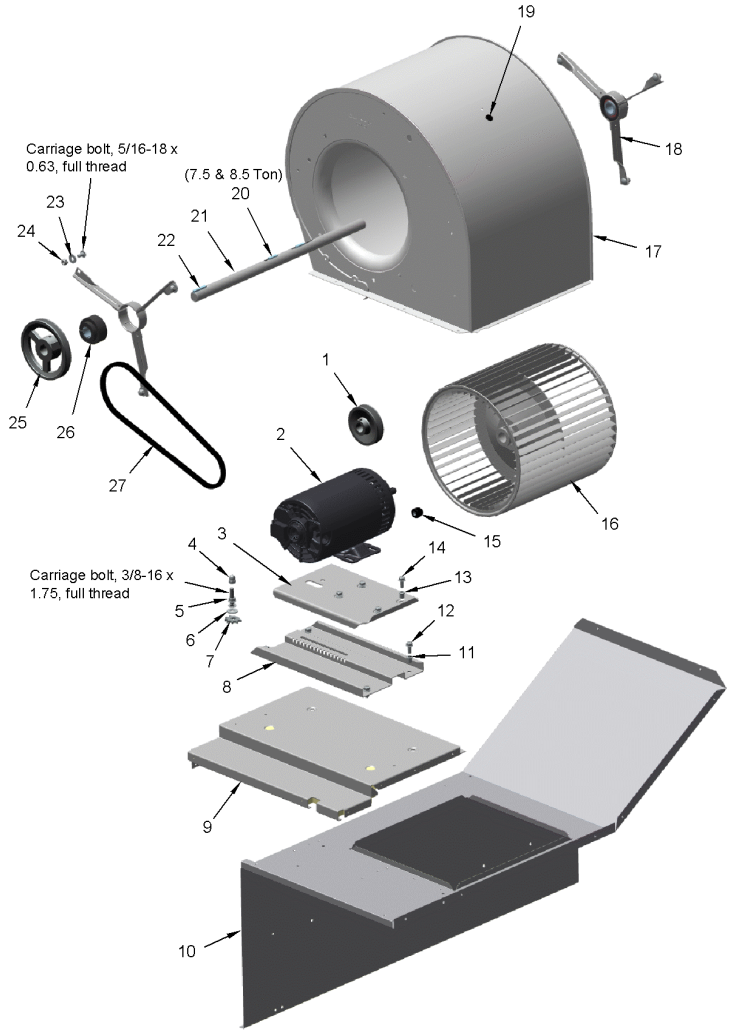

This is a typical illustration. The unit in the field may not appear exactly as shown.

Part No.	Reference No.	Quantity	Description
CNT03511	*	1	CONTROL; LIMIT, 120F, AUTOMATIC RESET, SPST, NC, 15A/120VAC, 10A/240VAC, QC TERMINAL
KIT12166	*	1	KIT; MOTOR MOUNTING. INCLUDES (1) BRK02977, (1) BRK02978, MOUNTING HARDWARE AND BELT TENSION LABELS.
PNL16808	*	1	PANEL; SIDE, HEAT EXCHANGER. 16.94 X 11.35
WIR09224	*	1	WIRE; HARNESS; BELT DRIVEN INDOOR MOTOR, PPM87, 16G-RD,17G-BL,76A-BK
SHE00856	1	1	SHEAVE; 1VL44, 7/8 IN BORE
MOT13032	2	1	MOTOR; 2.0 HP AT 208-230/460/60/3. 1.5 HP AT 190/380-415/50/3, 1740 RPM, 145T FRAME, BALL BEARINGS
BRK02978	3	1	BRACKET; MOTOR MOUNTING PLATE, TOP, 11.7 X 7.8. INCLUDES (4) .31-18 HEX RIVNUTS.
NUT01042	4	1	NUT; HEX, 3/8-16 UNC, ACORN, HIGH CROWN, BELT DRIVE MOTOR BRACKET
NUT00079	5	1	NUT; .38-16
WAS00283	6	1	WASHER; PLAIN, .43 ID X 1.00 OD, .083 THK, CARBON-STL PLD
BRK02975	7	1	BRACKET; ADJUSTMENT, MOTOR (IDLER GEAR)
BRK02977	8	1	BRACKET; MOTOR MOUNTING PLATE, BOTTOM, 14.5 X 8.0. INCLUDES (4) 0.31-18 X 0.75 HEX MACH SCREWS.
INS03491	9	1	INSULATION; WRAPPER FRONT
PNL16810	9	1	PANEL; WRAPPER, TOP, 19.74 X 16.59
NUT00588	11	4	NUT; HEX RIVET, .31-18
SCR01634	12	4	SCREW; .31-18 X .75, HEX MACH
NUT00588	13	4	NUT; HEX RIVET, .31-18
SCR01634	14	4	SCREW; .31-18 X .75, HEX MACH
BUS00363	15	1	BUSHING; STRAIN RELIEF
BUS00485	19	1	BUSHING; .62 MTG W/MAX .44 ID
KEY00300	22	1	KEY; 1/4 IN X 1/4 IN X 1-1/2 IN
SHE01029	25	1	SHEAVE; 5.45 OUTSIDE DIAMETER,1IN.BORE, 5.20 & 4.86 PITCH
BRG01579	26	2	BEARING; BALL; 1.0 BORE, BB CRTG, RUBBER MOUNT

FAN - OUTDOOR

75012613

REV
A

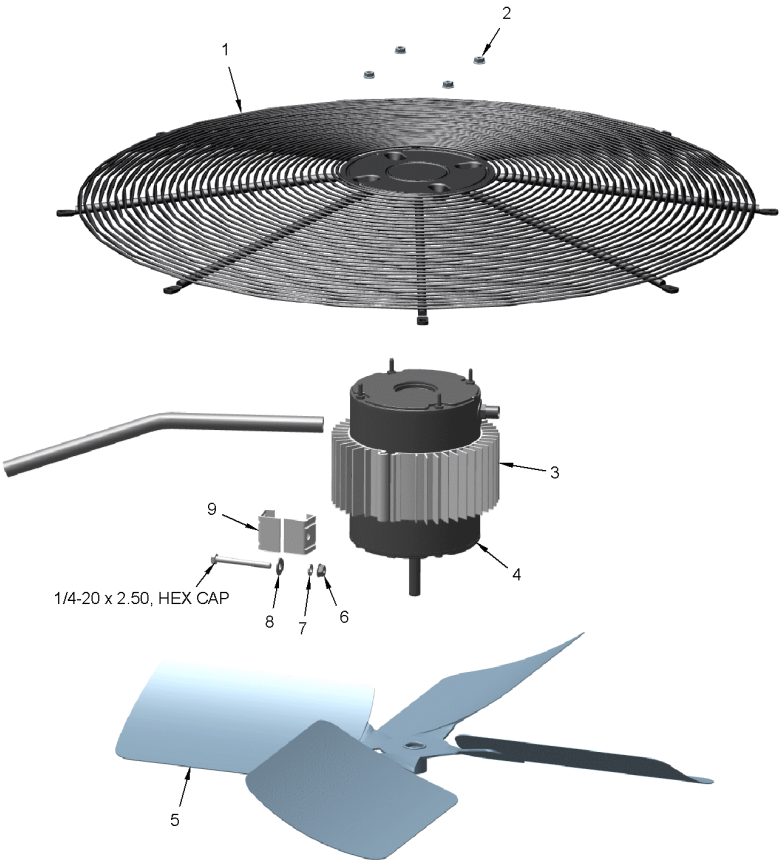

This is a typical illustration. The unit in the field may not appear exactly as shown.

Part No.	Reference No.	Quantity	Description
GRL01353	1	1	GRILLE; OUTDOOR FAN, 30.33 MTG DIA
NUT01332	2	4	NUT; SERRATED HEX FLANGE, ZINC PLATED (IF RUBBER CAP IS NEEDED ORDER IRT00017)
RNG01005	3	2	RING; EXTRUDED FIN, HEAT SINK, 3.00 WIDE, UNRESTRAINED DIM IS 7.20/6.61
MOT18646	4	1	MOTOR; AL OD MOTOR, 3 PHASE 0.7 HP, 230V
FAN06090	5	1	FAN; BLADE, OD FAN - 26X4XH24/L26 - DUAL SET-SCREW
NUT00009	6	1	NUT; .25-20, HEX LOCK
WAS00670	7	1	WASHER; .26 ID X .49 OD
WAS00041	8	1	WASHER; FLAT, PLAIN, #12 .25 ID X .56 OD, .065 THK, CARBON STL-PLD
BRK00688	9	2	BRACKET; CONNECTING, HEAT SINK

HARNESS - POWER & CONTROLS 75012826 REV A

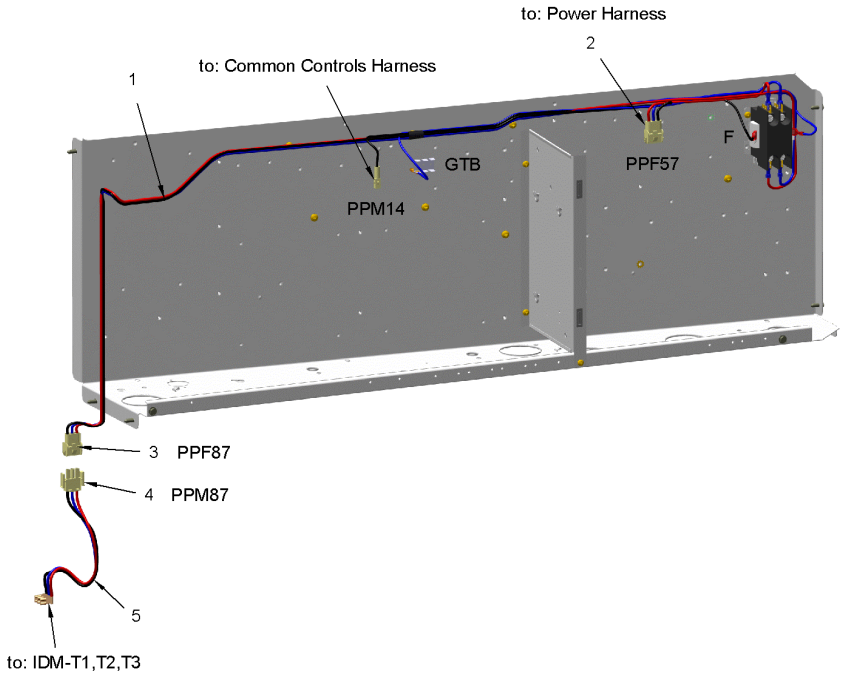

This is a typical illustration. The unit in the field may not appear exactly as shown.

Part No.	Reference No.	Quantity	Description
WIR09235	1	1	WIRE; HARNESS, PWR & CNTLS, BELT DRIVE MOTOR, PPF87, PPM14, PPF57, 16F-RD,17F-BL,101DL-BL,117S-BK,W93-RD,W94-BL, W96-BK
CON00973	2	1	CONNECTOR; 3 CKT, CAP HSG, WHITE/NATURAL
CON00973	3	1	CONNECTOR; 3 CKT, CAP HSG, WHITE/NATURAL
CON00486	4	1	CONNECTOR; PLUG HOUSING, 3 PIN MALE
WIR09224	5	1	WIRE; HARNESS; BELT DRIVEN INDOOR MOTOR, PPM87, 16G-RD,17G-BL,76A-BK

HARNESS - POWER 75012825 REV A

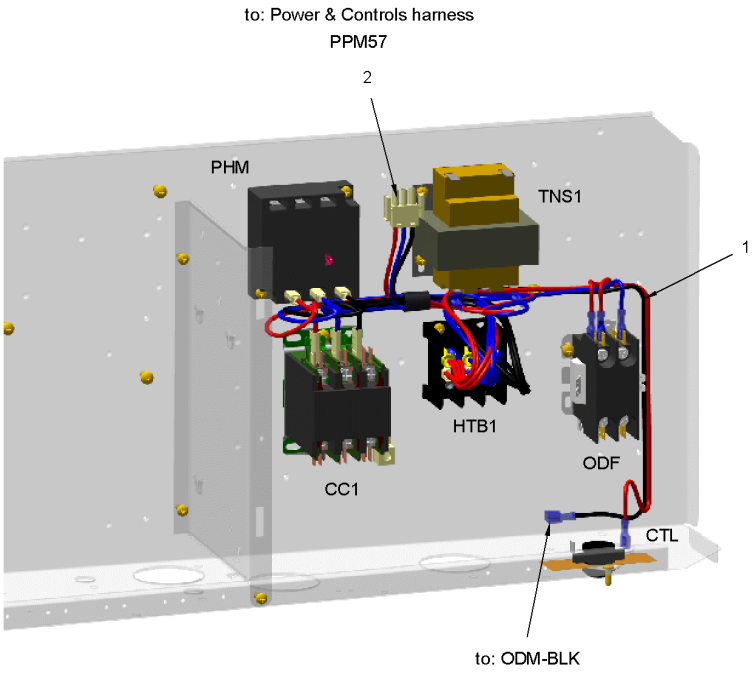

This is a typical illustration. The unit in the field may not appear exactly as shown.

Part No.	Reference No.	Quantity	Description
WIR09241	1	1	WIRE; HARNESS, POWER. CC1,ODF,ODM,PHM,TNS1,PPM57 TO HTB1 & CTL
CON00486	2	1	CONNECTOR; PLUG HOUSING, 3 PIN MALE

CONTROL PANEL

75012742

REV
A

The parts that appear on this illustration are for all options.
Parts will appear in the Parts List if factory installed.

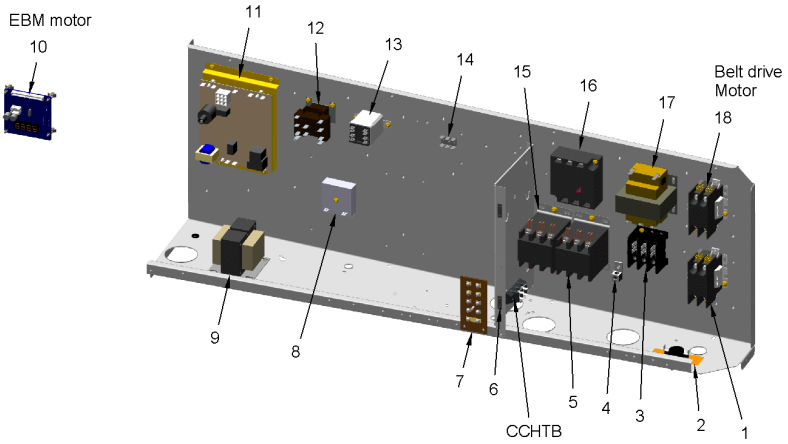

This is a typical illustration. The unit in the field may not appear exactly as shown.

Part No.	Reference No.	Quantity	Description
CTR01203	1	1	CONTACTOR; 2P, 30A, 24V COIL, 30 FLA AT 277V
CNT01405	2	1	CONTROL; TEMP, OPEN 65F, CLOSE 55F, SPST
CON00077	4	1	CONNECTOR, ELECTRIC GROUND, 14-2 AWG SOLDERLESS
CTR01870	5	1	CONTACTOR; 3 POLE, 30 FLA, W/O LUGS, 50/60 HZ, 24V COIL
CAT00043	6	2	CATCH; MAGNETIC SNAP-IN
TER01594	7	1	TERMINAL; STRIP, LTB, INCLUDES CO2 & ESTOP CONNECTORS
BRK04176	11	1	BRACKET; IGNITION MODULE, 6.56 X 5.00 X 0.38
CNT04716	11	1	CONTROL; MODULE, STANDALONE GAS, SINGLE STAGE
RLY01040	12	1	RELAY; SPDT, 120/208/240/277/480/600V, QUICK CONNECT TERM., 24V COIL
TER01680	14	1	TERMINAL STRIP; .25IN. FASTON
CNT05176	16	1	CONTROL; MONITOR, 3-PHASE LINE, UNIVERSAL 180-632 VAC, PHASE AND LOSS REVERSAL
TRR00825	17	1	TRANSFORMER; 75 VA, 208-230V PRI, 24V SEC
CTR01203	18	1	CONTACTOR; 2P, 30A, 24V COIL, 30 FLA AT 277V

REFRIGERATION 75012686 REV A

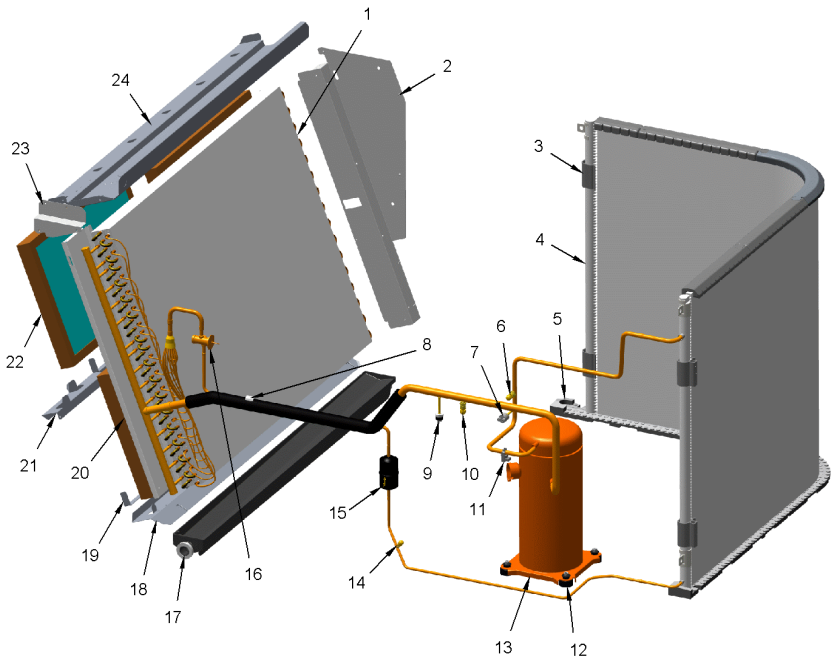

This is a typical illustration. The unit in the field may not appear exactly as shown.

Part No.	Reference No.	Quantity	Description
DST00944	*	1	DISTRIBUTOR; ASSEMBLY, INDOOR, 16 OUTLETS, #6 NOZZLE
WIR03438	*	1	WIRE; HARNESS, COMPRESSOR, 12 AWG, CC1, 46 IN LENGTH (3 WIRE-RD,BL,BK)
COL18432	1	1	COIL; INDOOR
BRK03096	2	1	BRACKET; FILTER STOP, 31.97 X 3.00
RTR00990	3	4	CLIP; MICROCHANNEL COIL MOUNTING
SUP06051	5	1	SUPPORT; REAR, BETWEEN UNIT BASE AND COIL, POLYPROPYLENE, 24.96 X 2.83
CAP00072	6	1	CAP; VALVE, SEAL, .25 FFL
SET00819	6	1	SEAT; SADDLE MOUNT ASSEMBLY
STM00803	6	1	STEM; SADDLE MOUNT, VALVE CORE, BRASS, .344 DIA X 1.29 SCHRAEDER TYPE FITTING (TO INCLUDE 5 PIECES)
SET00819	7	1	SEAT; SADDLE MOUNT ASSEMBLY
SWT03402	7	1	SWITCH; HIGH PRESSURE, BRAZED, OPENS AT 650 PSIG, CLOSES AT 550 PSIG, 61 INCH WHITE LEADS
TUB13468	7	1	TUBE; DISCHARGE, INCLUDES HPCO
CLP01073	8	1	CLIP; BULB (RED)
SET00819	9	1	SEAT; SADDLE MOUNT ASSEMBLY
SWT03623	9	1	SWITCH; LOW PRESSURE CUTOUT, 250 OPEN, ACTUATION PRESSURE 55 +/- 5, RESET PRESSURE 35 +/- 5
TUB14390	9	1	TUBE; SUCTION ASSEMBLY
WIR04406	9	1	WIRE; HARNESS, LOW PRESSURE SWITCH, 42 IN LENGTH, BLUE WIRES, CIR 1
CAP00072	10	1	CAP; VALVE, SEAL, .25 FFL
SET00819	10	1	SEAT; SADDLE MOUNT ASSEMBLY
STM00803	10	1	STEM; SADDLE MOUNT, VALVE CORE, BRASS, .344 DIA X 1.29 SCHRAEDER TYPE FITTING (TO INCLUDE 5 PIECES)
THT02760	11	1	THERMOSTAT; WITH CLIP, .5/.625 TUBE, 72" BLACK WIRES, SPST, 230F OPEN, 180F CLOSE
ISR00007	12	4	ISOLATOR; VIBRATION
NUT00355	12	4	NUT; HEX, LOCK, 5/16IN.-18
COM08837	13	1	COMPRESSOR; SCROLL, SSA067A3BPZ, 5.6 TON, 200/230/60/3, 200/220/50/3, R410A, .50 ID DISCHARGE, .875 ID SUCTION
HTR06511	13	1	HEATER; CRANKCASE, 70W, 230V, 6.5 DIA, 65/46 IN LEAD LENGTHS
CAP00072	14	1	CAP; VALVE, SEAL, .25 FFL
COR00006	14	1	CORE; VALVE PORT, .79 LENGTH, .206-36 UNS 2A THD
VAL01483	14	1	VALVE; BODY, .44-20 THD X .25 ODS, STRAIGHT, BRASS, LESS CORE
DHY01511	15	1	DRIER; FILTER, LIQUID LINE, 5/16 ODM INLET X 5/16 ODF OUTLET, 8 CU INCH
VAL10590	16	1	VALVE; EXPANSION, 6 TON, 3/8 ODF IN X 1/2 ODF OUT, NON-ADJUSTABLE, R410A, 114.8 PSIG
BOF02311	18	1	BLOCKOFF; INDOOR COIL BOTTOM, 51.44 X 2.65 X 2.15
GKT04109	18	1	GASKET; NEOPRENE CLOSED CELL, WITH ADHESIVE, .75 X .25 X 44L
BOF01689	20	1	BLOCKOFF; INDOOR COIL, FRONT, 32.5 X 5.5
BRK03938	21	1	BRACKET; FILTER CHANNEL, 50.50 LENGTH
BRK03098	23	1	BRACKET; TOP, INDOOR COIL MOUNT, 6 IN LENGTH
BOF02399	24	1	BLOCKOFF; ID COIL - TOP C-CAB W FILTER RETENTION

HEAT EXCHANGER

75012465

REV
A

All parts are included with #1, except the TCO1 Plug #2.

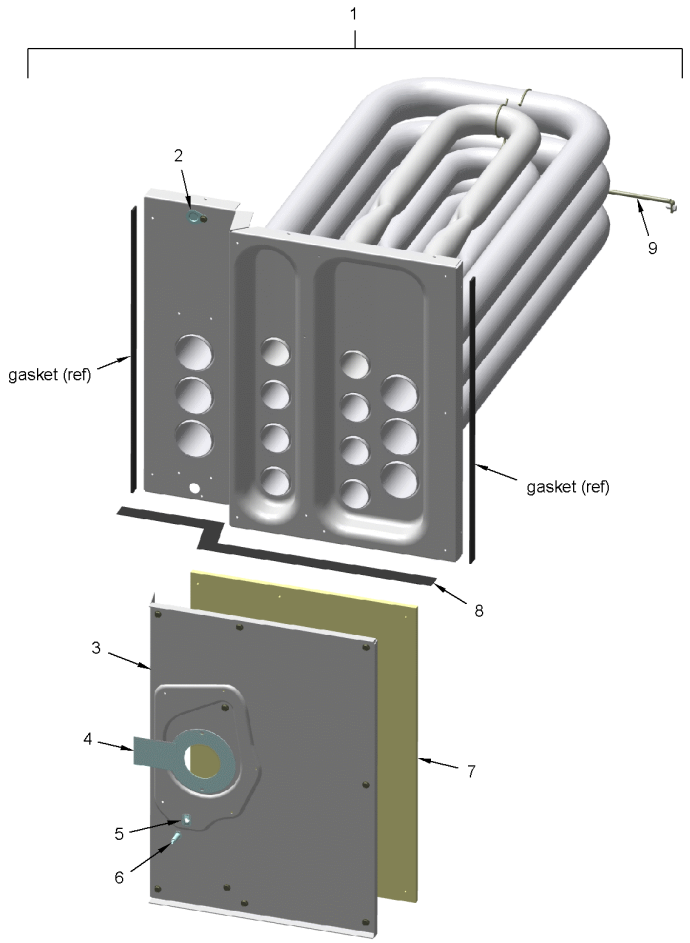

This is a typical illustration. The unit in the field may not appear exactly as shown.

Part No.	Reference No.	Quantity	Description
DIF00361	*	1	DIFFUSER; HEAT EXCHANGER, 14.50 X 3.90
EXC02073	1	1	EXCHANGER; HEAT
PLU01294	2	1	PLUG; GAS HEAT TC01
ORF01415	4	1	ORIFICE; AIR, 1.593 DIA, ALUMINUM
WEL00848	5	1	WELL; BULB, TAP, STATIC, 1.0 LENGTH X 0.50 OD X 0.281 OD X 0.125 ID
CLP00940	6	1	CLIP; STATIC, RETAINER, .80 X .56 X .022
INS02777	7	1	INSULATION; COLLECTOR COVER, 18.75 X 13.48 X 0.34, ALUMINUM/SILICONE
GKT03926	8	1	GASKET; HEAT EXCHANGER VESTIBULE, FIBERGLASS REINFORCED, 19.69 X .125
ROD01137	9	1	ROD; SUPPORT, 20 INCHES

BURNER 75012435 REV A

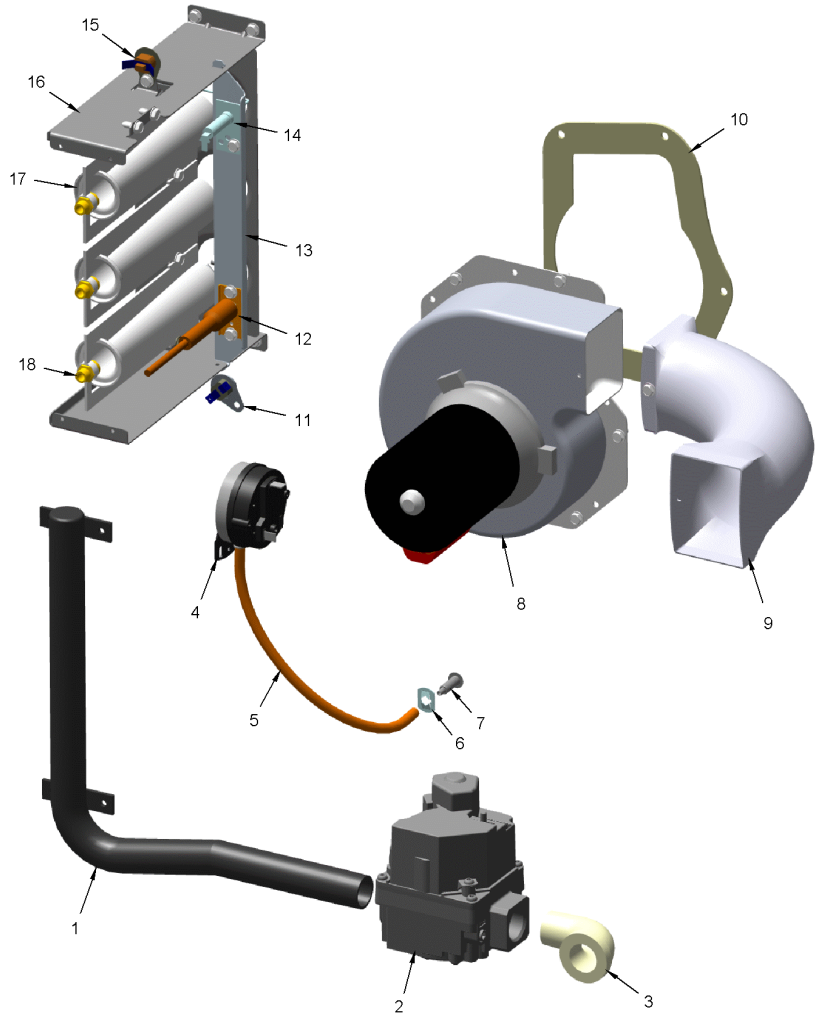

This is a typical illustration. The unit in the field may not appear exactly as shown.

Part No.	Reference No.	Quantity	Description
CNT03780	*	1	CONTROL; LIMIT, 155F, AUTOMATIC RESET, SPST, NC, 15A/120VAC, 10A/240VAC, QC TERMINAL
WIR09246	*	1	WIRE; HARNESS; POWER,ELECTROMECHANICAL COMBUSTION BLOWER, 208/230V (1AK-RD,21A-VI,2AE-BL,8A-BR)
MFD00997	1	1	MANIFOLD; GAS, 3/4/X 3 BURNER (DOES NOT INCLUDE THE BURNER ORIFICES)
VAL08750	2	1	VALVE; GAS, NATURAL, 2 STAGE, 24 VAC, 50/60 HZ, .4 AMP REDUNDANT, INLET OUTLET 3/4 X 3/4-14 NPT, MAX OP PRESSURE .5 PSIG
ELL00030	3	1	ELBOW; .75, 90 DEG ST, 150# MI
CNT03520	4	1	CONTROL; DIFFERENTIAL PRESSURE SWITCH, -0.15 IN WC OPEN, SPDT, SNAP ACTING CONTACTS, NO, 3 FLA, 18 LRA AT 24 VAC
TUB10506	5	1	TUBE; CONNECTING PRESSURE, SILICON RUBBER, .19 ID X .06W, 12.50 IN
CLP00940	6	2	CLIP; STATIC, RETAINER, .80 X .56 X .022
WEL00848	7	1	WELL; BULB, TAP, STATIC, 1.0 LENGTH X 0.50 OD X 0.281 OD X 0.125 ID
FAN03130	8	1	FAN; 2 SPEED COMBUSTION AIR BLOWER, 1/15 HP MOTOR, 208-230/50-60/1, 2800/3350 RPM, .50/.42 AMPS, WHEEL SIZE 4.72 DIA OD, 3 MFD CPT AT 370V
DUC01040	9	1	DUCT; FLUE EXHAUST, ALUMINUM COATED WELDED STEEL TUBING
GKT03850	10	1	GASKET; COMBUSTION BLOWER
CNT04976	11	1	CONTROL; BI-METAL DISC LIMIT; 145F OPEN, AUTO RESET, SPST, NC, 120/240V, 125VA, PILOT DUTY, 18 AWG, -BLACK/YELLOW WIRE
IGN00114	12	1	IGNITOR; ELECTRODE, 57 IN LEAD
BRK04322	13	1	BRACKET; IGNITOR AND FLAME SENSOR, 9.9 X 1.1
SEN00297	14	1	SENSOR; FLAME
SWT02649	15	1	SWITCH; FLAME ROLLOUT, 240F, OPENS ON TEMP RISE, MANUAL RESET, SPST, 25A/240V QC TERMINAL
BRK04318	16	1	BRACKET; GAS 3-BURNER SUPPORT, 8.50 X 2.53 X 9.66
BNR01071	17	3	BURNER; 0.60 ID INSHOT BURNER, 0.036 THK 304 STAINLESS STEEL
ORF01342	18	3	ORIFICE; GAS, SPUD, 3.3 MM DIA

Part No.	Reference No.	Quantity	Description
BAYABRD001C	*	1	KIT; ACCESSORY, OPTIONS BOARD (BAYABRD001CA)
BAYBARM011A	*	1	DAMPER; BAROMETRIC RELIEF (BAYBARM011AB)
BAYBCIR001A	*	1	KIT; FIELD INSTALLED BCI (BAYBCIR001A)
BAYCURB043A	*	1	CURB; ROOFCURB (BAYCURB043AB)
BAYDFPS004A	*	1	KIT; FAN FAILURE SWITCH (BAYDFPS004AB). (OPTIONS BOARD KIT09433-BAYABRD001CA MUST BE INSTALLED IN THE UNIT FOR THIS ACCESSORY TO OPERATE).
BAYDMPR055B	*	1	DAMPER; 0-50 PERCENT MOTORIZED OUTSIDE AIR DAMPER, ELECTROMECHANICAL (BAYDMPR055B)
BAYDMPR056B	*	1	DAMPER; 0-50% MANUAL OUTSIDE AIR DAMPER (BAYDMPR056BA)
BAYECON088B	*	1	ECONOMIZER; ELECTROMECHANICAL 0-100%DRY BULB
BAYENTH300A	*	1	ACCESSORY; REFERENCE ENTHALPY
BAYENTH301A	*	1	ACCESSORY; COMPARATIVE ENTHALPY
BAYHAKT010E	*	1	KIT; ACCESSORY, HIGH ALTITUDE
BAYHSDR012A	*	1	KIT; HIGH STATIC DRIVE (BAYHSDR012AA)
BAYHSMT082A	*	1	KIT; OVERSIZED MOTOR, 2 HP (BAYHSMT082AA)
BAYLPKT029C	*	1	KIT; LP CONVERSION (BAYLPKT029C)
BAYPWRX026A	*	1	KIT; POWER EXHAUST, 208/230V (BAYPWRX026A)
BAYQACB011A	*	1	CURB; ADAPTA CURB (BAYQACB011AA), TRANSITIONS BAYCURB022B, 83.50 X 49.375
BAYQACB012A	*	1	CURB; ADAPTA CURB (BAYQACB012AA), TRANSITIONS BAYCURB025B, 90.50 X 60.625
BAYQACB013A	*	1	CURB; ADAPTA CURB (BAYQACB013AA), TRANSITIONS BAYCURB026B, 103.375 X 68.125
BAYSENS050A	*	1	WIRELESS ZONE SENSOR
BAYSENS924A	*	1	SENSOR, TOUCH SCREEN, PROGRAMMABLE SPACE, RELIATEL
BAYSTAT023A	*	1	RESISTOR; REMOTE POTENTIOMETER
BAYSTAT152A	*	1	THERMOSTAT; PROGRAMABLE TOUCH SCREEN 3H/2C
BAYSTAT170A	*	1	ACCESSORY; SENSOR
PLT04561	*	1	PLATE; WALL COVER PLATE ASSEMBLY (BAYMTPL110A)
THT02773	*	1	THERMOSTAT; WALL MOUNT, NON-PROGRAMMABLE 3H/2C (BAYSTAT155A)
THT02774	*	1	THERMOSTAT; WALL MOUNT, PROGRAMMABLE 3H/2C, (BAYSTAT150AA)

MODEL NUMBER DESCRIPTION

75012766

REV A

DX Cooling / DX Cooling, Gas Heat / Pkg Heat Pump

Example Model Number:

YSC092H3RZA00C6C2A1A000DEA11A0D1

1 - - - 5 - - - - 10 - - - - 15 - - - - 20 - - - - 25 - - - - 30 -

Digit 1 – Unit Type
D = Dual Fuel Heat Pump
T = DX Cooling
W = Packaged Heat Pump
Y = DX Cooling, Gas Heat

Digit 2 – Efficiency
S = Standard Efficiency
H = High Efficiency

Digit 3 – Airflow
C = Convertible

Digits 4,5,6 – Nominal Gross Cooling Capacity (MBh)
072 = 6 Ton
074 = 6 Ton
090 = 7.5 Ton
092 = 7.5 Ton
102 = 8.5 Ton
120 = 10 Ton

Digit 7 – Major Design Sequence
H = Major Design Sequence

Digit 8 – Voltage Selection
3 = 208-230/60/3
4 = 460/60/3
W = 575/60/3

Digit 9 – Unit Controls
E = Electromechanical
R = ReliaTel™ Microprocessor

Digit 10 – Heating Capacity
Note: *Applicable to Digit 1, T or W models only*
0 = No Electric Heat
C = 9 kW
G = 18 kW
K = 27 kW
N = 36 kW
P = 54 kW
Note: *Applicable to Digit 1, D or Y models only*
L = Low Heat
M = Medium Heat
H = High Heat
X = Low Heat, Stainless Steel Heat Exchanger
Y = Medium Heat, Stainless Steel Heat Exchanger
Z = High Heat, Stainless Steel Heat Exchanger

Digit 11 – Minor Design Sequence
A = First Sequence

Digits 12, 13 – Service Sequence
** = Factory Assigned

Digit 14 – Fresh Air Selection
0 = No Fresh Air
A = Manual Outside Air Damper 0-50%
B = Motorized Outside Air Damper 0-50%
C = Economizer, Dry Bulb 0-100% without Barometric Relief
D = Economizer, Dry Bulb 0-100% with Barometric Relief
E = Economizer, Reference Enthalpy 0-100% without Barometric Relief
F = Economizer, Reference Enthalpy 0-100% with Barometric Relief
G = Economizer, Comparative Enthalpy 0-100% without Barometric Relief
H = Economizer, Comparative Enthalpy 0-100% with Barometric Relief
K = Low Leak Economizer with Barometric Relief
M = Low Leak Economizer with Reference Enthalpy with Barometric Relief
P = Low Leak Economizer with Comparative Enthalpy with Barometric Relief

Digits 15 – Supply Fan/Drive Type/Motor
0 = Standard Drive
1 = Oversized Motor
6 = Single Zone VAV
7 = Multi-Speed Indoor Fan
E = Multi-Zone Variable Air Volume

Digit 16 – Hinged Service Access/Filters
0 = Standard Panels/Standard Filters
A = Hinged Access Panels/Standard Filters
B = Standard Panels/2" MERV 8 Filters
C = Hinged Access Panels/2" MERV 8 Filters
D = Standard Panels/2" MERV 13 Filters
E = Hinged Access Panels/2" MERV 13 Filters

MODEL NUMBER DESCRIPTION

75012767

REV A

DX Cooling / DX Cooling, Gas Heat / Pkg Heat Pump

Example Model Number:

YSC092H3RZA00C6C2A1A000DEA11AD1

1 - - - 5 - - - - 10 - - - - 15 - - - - 20 - - - - 25 - - - - 30 -

Digit 17 – Condenser Coil Protection
- 0 = Standard Coil
- 1 = Standard Coil with Hail Guard
- 2 = Black Epoxy Condenser Coil Guard
- 3 = Black Epoxy Condenser Coil with Hail Guard
- 4 = CompleteCoat Condenser Coil
- 5 = CompleteCoat Condenser Coil with Hail Guard

Digit 18 – Through the Base Option
- 0 = No Through-the-Base Provisions
- A = Through-the-Base Electric
- B = Through-the-Base Gas Piping
- C = Through-the-Base Electric and Gas Piping

Digit 19 – Disconnect/Circuit Breaker
- 0 = No Disconnect/No Circuit Breaker
- 1 = Unit Mounted Non-Fused Disconnect
- 2 = Unit Mounted Circuit Breaker

Digit 20 – Convenience Outlet
- 0 = Convenience Outlet
- A = Unpowered Convenience Outlet
- B = Powered Convenience Outlet

Digit 21 – Communications Options
- 0 = No Communications Interface
- 1 = Trane® Communications Interface
- 2 = LonTalk® Communications Interface
- 6 = BACnet® Communications Interface
- 7 = Air-Fi™ Wireless Communications Interface

Digit 22 – Refrigeration System Option
- 0 = Standard Refrigeration System

Digit 23 – Refrigeration Controls
- 0 = Without Refrigeration Controls
- 1 = Frostat™

Digit 24 – Smoke Detector
- 0 = No Smoke Detector
- A = Return Air Smoke Detector
- B = Supply Air Smoke Detector
- C = Supply and Return Air Smoke Detectors
- D = Plenum Smoke Detector

Digit 25 – System Monitoring Controls
- 0 = Standard Monitoring System
- 1 = Clogged Filter Switch
- 2 = Fan Failure Switch
- 3 = Discharge Air Sensing Tube
- 4 = Clogged Filter Switch and Fan Failure Switch
- 5 = Clogged Filter Switch and Discharge Air Sensing Tube
- 6 = Fan Failure Switch and Discharge Air Sensing Tube
- 7 = Clogged Filter Switch, Fan Failure Switch and Discharge Air Sensing Tube
- A = Condensate Drain Pan Overflow Switch
- B = Clogged Filter Switch and Condensate Drain Pan Overflow Switch
- C = Fan Failure Switch and Condensate Drain Pan Overflow Switch
- D = Discharge Air Sensing Tube and Condensate Drain Pan Overflow Switch
- E = Clogged Filter Switch, Fan Failure Switch and Condensate Drain Pan Overflow Switch
- F = Clogged Filter Switch,Discharge Air Sensing Tube and Condensate Drain Pan Overflow Switch
- G = Fan Failure Switch, Discharge Air Sensing Tube and Condensate Drain Pan Overflow Switch
- F = Clogged Filter Switch,Fan Failure Switch, Discharge Air Sensing Tube and Condensate Drain Pan Overflow Switch

Digit 26 – System Monitoring Controls
- 0 = No Monitoring Controls
- A = Demand Control Ventilation (CO_2)
- B = Low Leak Economizer with FDD (Fault Detection & Diagnostics)
- C = FDD (Fault Detection & Diagnostics) with DCV (Demand Control Ventilation)

Digits 27 – Unit Hardware Enhancements
- 0 = No Enhancements
- 1 = Stainless Steel Drain Pan

Digit 31 – Advanced Unit Controls
- 0 = Standard Unit Controls
- 1 = Human Interface