INSTALLATION INSTRUCTIONS

WOODFORD

For more information contact…

WOODFORD MANUFACTURING COMPANY

2121 Waynoka Road, Colorado Springs, Colorado 80915 • Phone: (800) 621-6032 • Fax: (800) 765-4115

To view our complete product line visit: www.woodfordmfg.com or email: sales@woodfordmfg.com

A Division of WCM Industries, Inc.

WF-30MS

Rev 06/10 Form No. IIWF-30MS.102

Wall Faucet Mounting Sleeve Installation Instructions

For Woodford Model 30 ONLY

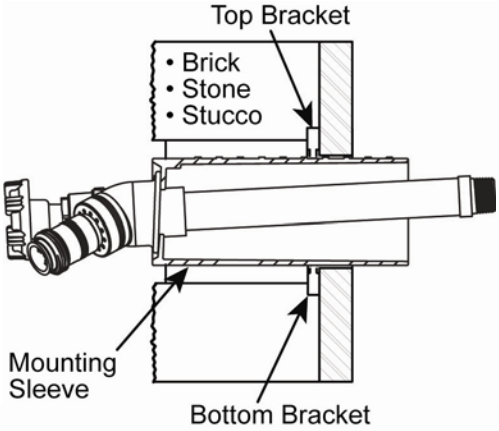

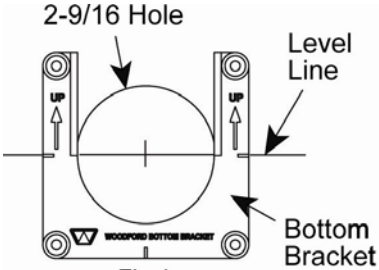

Fig 1

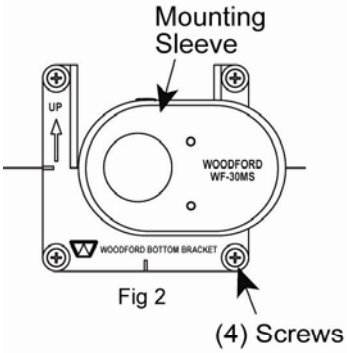

Fig 2

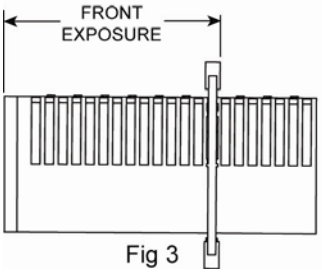

Fig 3

1. Determine the wall surface where the Mounting Sleeve will be located. Fig 1
2. Draw a level line, center and drill a 2-9/16" hole. Fig 1
3. Align the Bottom Bracket, arrows pointing up, with the hole and level line. (The Mounting Brackets can be installed on the inside or the outside of the wall.) Fig 1
4. Use (4) of the furnished wood screws to secure the Bottom Bracket. Fig 2
5. Slide the Mounting Sleeve through the hole. Use the number scale on top of the Mounting Sleeve to determine exposure distance. Fig 3
6. Slide the Top Bracket over the Mounting Sleeve and into the Bottom Bracket. Fig 4
7. Lock the Top Bracket into one of the Mounting Sleeve slots. Use the remaining wood screw to secure the Top Bracket. Fig 5

Note: If soldering to an inlet, make sure heat is far enough away from the Mounting Sleeve.

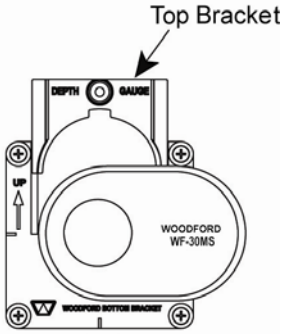

Fig 4

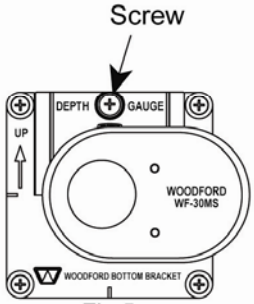

Fig 5