| EFFECTIVE: 29-APR-25 | DIMENSION PRINT<br>WORLD MOTOR CLOSED COUPLED PUMP, AGR ON ODE<br>FRAME: 284, 286JM<br>BASIC TYPE: CTI-4 | PRINT: 08-1379 |
|---|---|---|
| SUPERSEDES: NEW | | SHEET: 1 OF 1 |

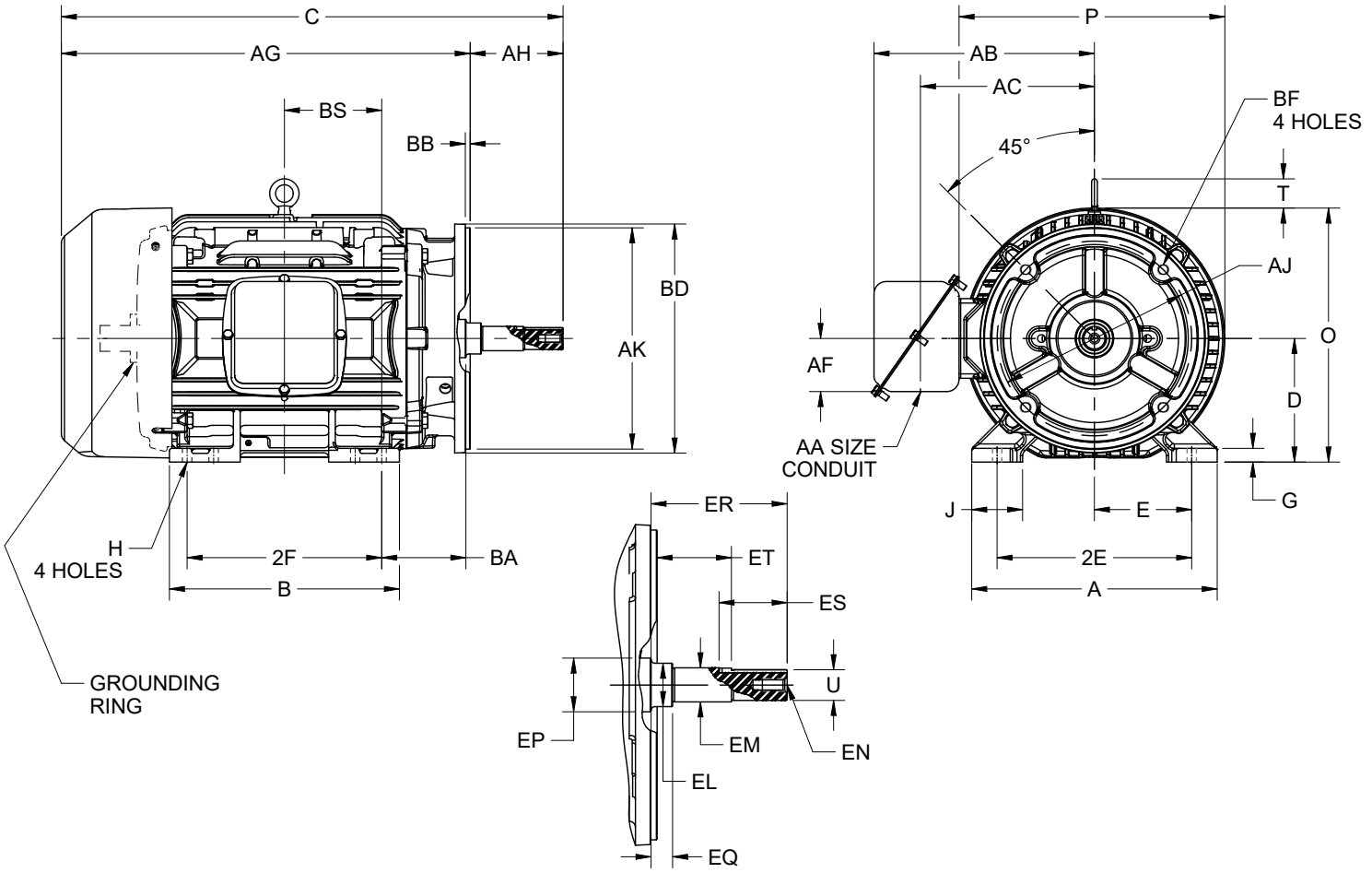


ALL DIMENSIONS ARE IN INCHES AND MILLIMETERS

| | UNITS | A | B | C | D -.06 | E | 2E ±.03 | G | H +.05 | J | K | O | P [2] |
|---|---|---|---|---|---|---|---|---|---|---|---|---|---|
| | IN | 13.88 | 13.00 | 28.36 | 7.00 | 5.50 | 11.00 | .78 | .53 | 2.88 | 4.00 | 14.28 | 14.50 |
| | MM | 353 | 330 | 720 | 178 | 140 | 279 | 20 | 13 | 73 | 102 | 363 | 368 |

| | UNITS | T | U -.0005 | AA | AB | AC | AF | AG | AH ±.031 | AJ | AK -.005 | BA | BB MIN |
|---|---|---|---|---|---|---|---|---|---|---|---|---|---|
| | IN | 2.06 | 1.2495 | 1.50 | 12.69 | 9.94 | 3.00 | 23.11 | 5.250 | 11.000 | 12.500 | 4.75 | .28 |
| | MM | 52 | 31.737 | | 322 | 252 | 76 | 587 | 133.35 | 149.23 | 317.50 | 121 | 7.11 |

| | UNITS | BD MAX | BF [3,4] | BS | EL -.002 | EM -.0005 | EN | EP MIN | EQ ±.020 | ER MIN | ES MIN |
|---|---|---|---|---|---|---|---|---|---|---|---|
| | IN | 12.84 | 5/8-11 X 1.25 | 5.51 | 1.750 | 1.3750 | 1/2-13 X 1.00 | 2.161 | .870 | 5.50 | 2.53 |
| | MM | 326 | | 140 | 44.45 | 34.925 | | 54.89 | 22.1 | 140 | 64 |

| | UNITS | ET ±.020 | EV | SQ KEY |
|---|---|---|---|---|
| | IN | 3.000 | 1.00 | .250 |
| | MM | 76.20 | 25 | 6.35 |

| | FRAME | UNITS | 2F ±.03 |
|---|---|---|---|
| | 284JM | IN | 9.50 |
| | | MM | 241 |
| | 286JM | IN | 11.00 |
| | | MM | 279 |

| TOLERANCES | |
|---|---|
| FACE RUNOUT | .007 T.I.R. |
| PERMISSIBLE ECCENTRICITY OF MOUNTING RABBET | .007 T.I.R. |
| PERMISSIBLE SHAFT RUNOUT | .003 T.I.R. |

1. ALL ROUGH CASTING DIMENSIONS MAY VARY BY .25" DUE TO CASTING AND/OR FABRICATION VARIATIONS.
2. LARGEST MOTOR WIDTH.
3. TOLERANCES SHOWN ARE IN INCHES ONLY.
4. STANDARD ASSEMBLY POSITION F-1 IS SHOWN F-2 IS PROVIDED WHEN SPECIFIED. CONDUIT OPENINGS MAY BE LOCATED IN STEPS OF 90ºREGARDLESS OF LOCATION.
5. ALL TAPPED HOLES ARE UNIFIED NATIONAL COARSE, RIGHT HAND THREAD.
6. TAP SIZE AND BOLT PENETRATION ALLOWANCE.

08-1379/-

**Nidec Motor Corporation**
**St. Louis, Missouri**

INFORMATION DISCLOSED ON THIS DOCUMENT IS CONSIDERED PROPRIETARY AND SHALL NOT BE REPRODUCED OR DISCLOSED WITHOUT WRITTEN CONSENT OF NIDEC MOTOR CORPORATION

| ISSUED BY | S. RAMIREZ |
|---|---|
| APPROVED BY | L. GARCIA |

IHP_DP_NMCA (MAR-2011) SOLIDEDGE