EFFECTIVE: 25-FEB-25	**DIMENSION PRINT** **HOSTILE DUTY WITH WM OUTLET BOX** **FRAME: 324, 326T, TS** **BASIC TYPE: CT**	PRINT: 07-3543
SUPERSEDES: 20-JUL-23		SHEET: 1 OF 1

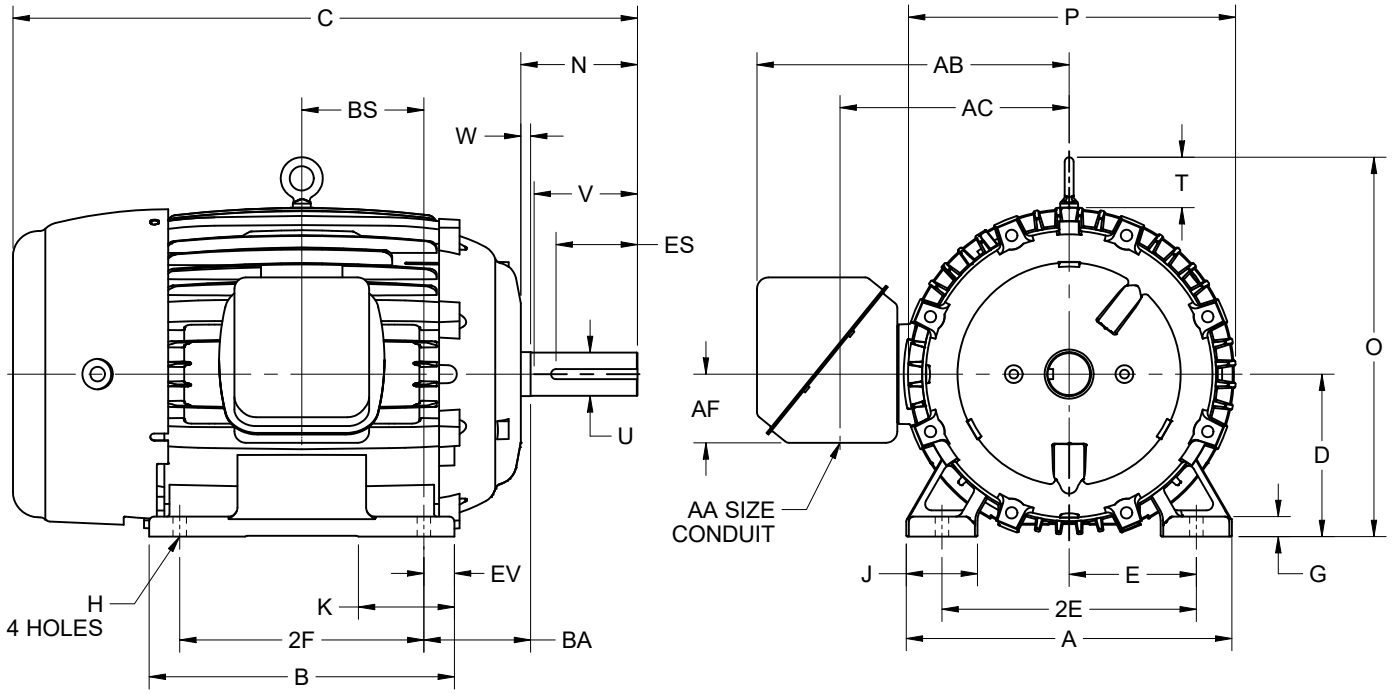

ALL DIMENSIONS ARE IN INCHES AND MILLIMETERS

UNITS	A	B	D -.06	E	2E ±.03	G	H +.05	J	K	O	P [2]
IN	16.00	15.00	8.00	6.25	12.50	1.00	.66	3.50	4.75	16.19	16.38
MM	406	381	203	159	318	25	17	89	121	411	416

UNITS	T	W	AA	AB	AC	AF	BA	BS	EV	SQ KEY
IN	2.50	.47	3.00	15.46	11.51	4.25	5.25	6.00	1.50	.500
MM	64	12		392	292	108	133	152	38	12.70

FRAME	UNITS	C	N	U -.001	V MIN	ES MIN
324, 326T	IN	30.69	5.75	2.125	5.00	3.91
	MM	780	146	53.98	127	99
324, 326TS	IN	29.19	4.25	1.875	3.50	2.03
	MM	741	108	47.63	89	52

FRAME	UNITS	2F ±.03
324T, TS	IN	10.50
	MM	267
326T, TS	IN	12.00
	MM	305

1. DIMENSIONS MAY VARY .25" DUE TO CASTING AND/OR FABRICATION VARIATIONS
2. LARGEST MOTOR WIDTH
3. STANDARD ASSEMBLY POSITION F-1 IS SHOWN. F-2 IS PROVIDED WHEN SPECIFIED. CONDUIT OPENINGS MAY BE LOCATED IN STEPS OF 90° REGARDLESS OF THE LOCATION
4. TOLERANCES ARE SHOWN IN INCHES ONLY

Nidec Motor Corporation
St. Louis, Missouri

INFORMATION DISCLOSED ON THIS DOCUMENT IS CONSIDERED PROPRIETARY AND SHALL NOT BE REPRODUCED OR DISCLOSED WITHOUT WRITTEN CONSENT OF NIDEC MOTOR CORPORATION

ISSUED BY	E.OVIEDO
APPROVED BY	J.RANGEL

IHP_DP_NMCA (MAR-2011) SOLIDEDGE