EFFECTIVE: 17-JUL-21	**DIMENSION PRINT** **ODP CLOSE COUPLED PUMP WITH CANOPY CAP** **FRAME: 284, 286JM, JP** **BASIC TYPE: DF4, FDF4, DF1, FDF1**	PRINT: 07-3495
SUPERSEDES: NEW		SHEET: 1 OF 1

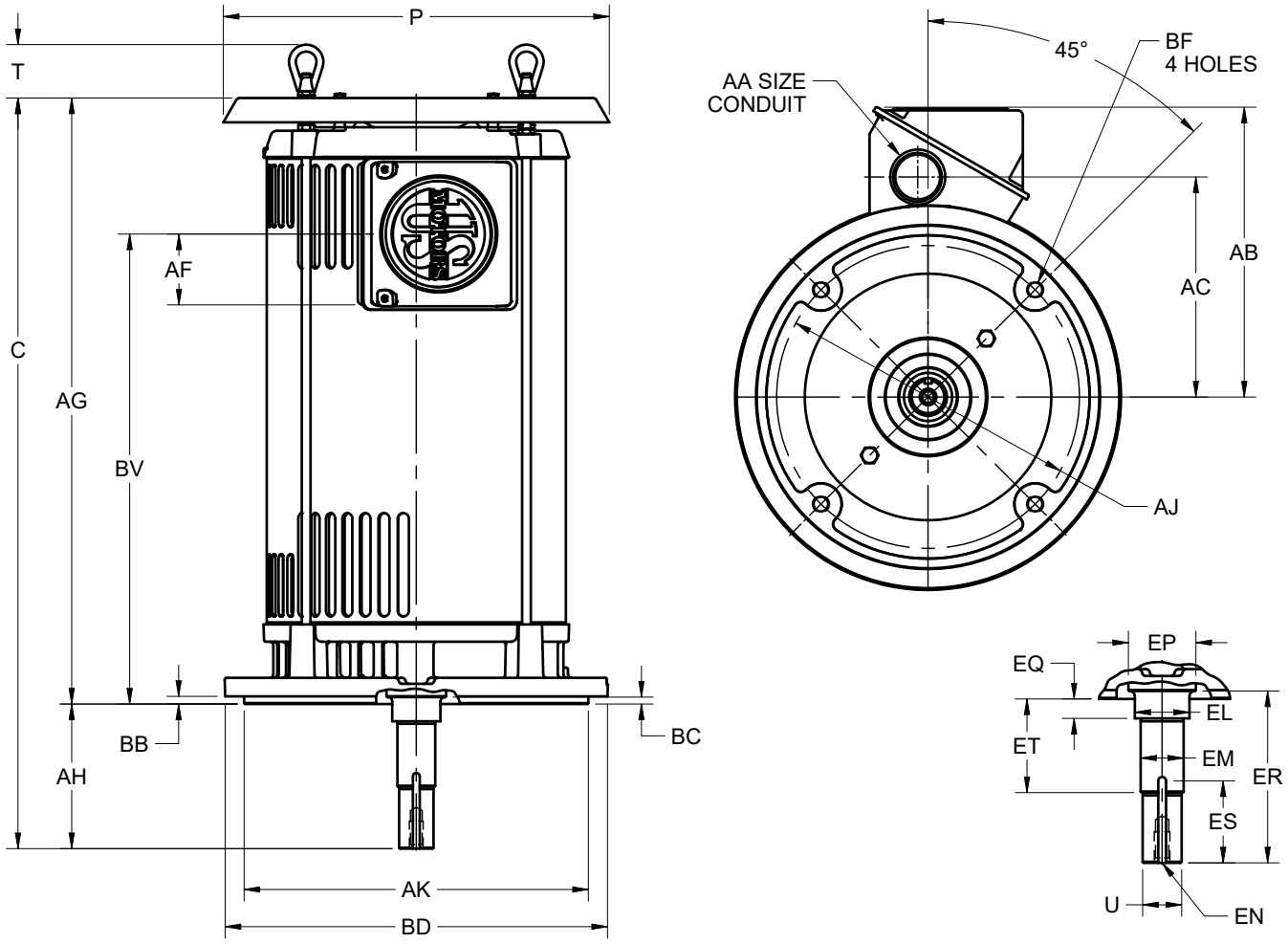

ALL DIMENSIONS ARE IN INCHES AND MILLIMETERS

UNITS		P [2]	T	U -.0005	AA	AB	AC	AF	AG	AJ	AK -.003	BB MIN	BC
	IN	14.00	1.94	1.2495	1.50	10.53	8.00	2.59	22.00	11.000	12.500	.25	.25
	MM	356	49	31.737		267	203	66	559	279.40	317.50	6	6

UNITS		BD MAX	BF [3,4]	BV	EL -.002	EM -.0005	EN [3,4]	EP MIN	ES MIN	SQ KEY
	IN	14.00	5/8-11 X .94	17.06	1.750	1.3750	1/2-13 X 1.00	1.75	2.53	.250
	MM	356		433	44.45	34.925		44	64	6.35

FRAME	UNITS	C	AH ±.031	EQ ±.015	ER MIN	ET ±.015
280JM	IN	27.25	5.250	.625	5.25	3.000
	MM	692	113.35	15.88	113	76.20
280JP	IN	30.13	8.125	2.375	8.13	5.875
	MM	765	206.38	60.33	207	149.23

TOLERANCES	
FACE RUNOUT	.004 TIR
PERMISSIBLE ECCENTRICTY OF MOUNTING RABBET	.004 TIR
PERMISSIBLE SHAFT RUNOUT	.002 TIR

1. DIMENSIONS MAY VARY .25" DUE TO CASTING AND/OR FABRICATION VARIATIONS
2. LARGEST MOTOR WIDTH
3. ALL TAP HOLES ARE UNIFIED NATIONAL COARSE, RIGHT HAND THREAD
4. TAP SIZE AND BOLT PENETRATION ALLOWANCE
5. TOLERANCES ARE SHOWN IN INCHES ONLY
6. FRAME REFERENCE: 284/286//17.25

07-3495/-

Nidec Motor Corporation
St. Louis, Missouri

INFORMATION DISCLOSED ON THIS DOCUMENT IS CONSIDERED PROPRIETARY AND SHALL NOT BE REPRODUCED OR DISCLOSED WITHOUT WRITTEN CONSENT OF NIDEC MOTOR CORPORATION

ISSUED BY
R. TIMMERMANN
APPROVED BY
E. O'HARA

IHP_DP_NMCA (MAR-2011) SOLIDEDGE