EFFECTIVE: 31-JAN-22	**DIMENSION PRINT** **ODP-CCP (VERTICAL MOUNTING) WITH OVERSIZED O/B** **FRAME: 210JP** **BASIC TYPE: DF1**	PRINT: 07-3044
SUPERSEDES: 05-DEC-12		SHEET: 1 OF 1

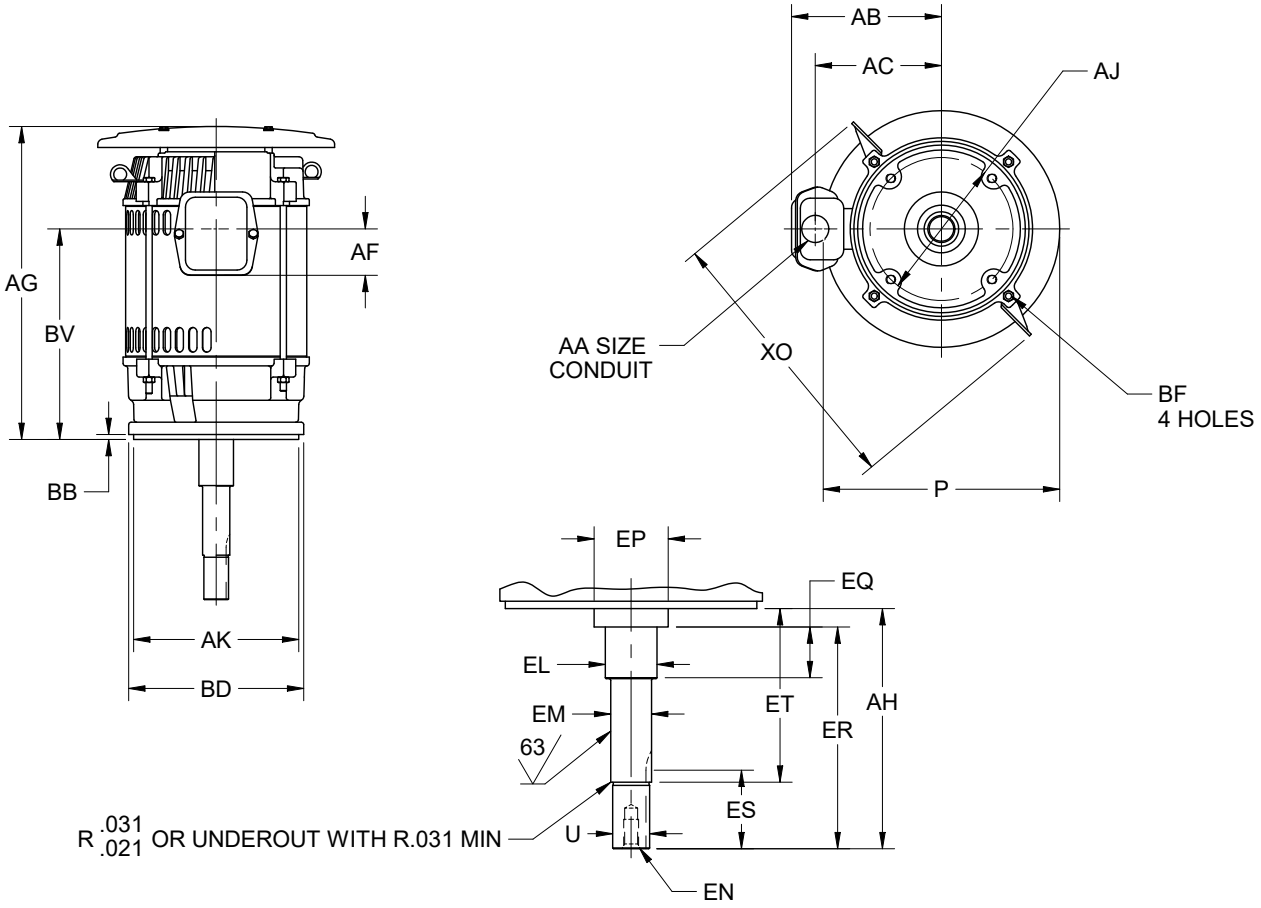

ALL DIMENSIONS ARE IN INCHES AND MILLIMETERS

	UNITS	P [2]	U -.0005	AA	AB	AC	AF	AH ±.003	AJ	AK -.003	BB ±.031	BD MAX
	IN	12.13	1.2495	1.00	8.31	6.50	2.63	8.125	7.250	8.500	.281	9.00
	MM	308	31.737	25	211	165	67	206.38	184.15	215.90	7.14	229

	UNITS	BF [3]	EL -.002	EM -.0005	EN [3]	EP MIN	EQ ±.015	ER MIN	ES MIN	ET ±.015	SQ KEY	XO
	IN	1/2-13X .75	1.750	1.3750	1/2-13X 1.00	1.75	2.375	8.13	1.65	5.875	.250	13.63
	MM		44.45	34.925		44	60.33	207	42	149.23	6.35	346

	FRAME	UNITS	AG	BV
	213JP	IN	14.50	11.06
		MM	368	281
	215JP	IN	16.00	12.56
		MM	406	319

1. ALL ROUGH DIMENSIONS MAY VARY BY .25" DUE TO CASTING AND/OR FABRICATION VARIATIONS.
2. LARGEST MOTOR WIDTH.
3. TAP SIZE AND BOLT PENETRATION ALLOWANCE.
4. ALL TAPPED HOLES ARE UNIFIED NATIONAL COARSE, RIGHT HAND THREAD.
5. CONDUIT BOX MAY BE LOCATED ON EITHER SIDE. CONDUIT OPENINGS MAY BE LOCATED IN STEPS OF 90 DEGREES REGARDLESS OF LOCATION. STANDARD AS SHOWN WITH CONDUIT OPENING DOWN.
6. TOLERANCES SHOWN ARE IN INCHES ONLY.
7. FRAME REFERENCE: 10.530/213//12.030/215

TOLERANCES	
FACE RUNOUT	.004 T.I.R.
PERMISSIBLE ECCENTRICITY OF MOUNTING RABBET	.004 T.I.R.
PERMISSIBLE SHAFT RUNOUT	.002 T.I.R.

07-3044/A

Nidec Motor Corporation
St. Louis, Missouri

INFORMATION DISCLOSED ON THIS DOCUMENT IS CONSIDERED PROPRIETARY AND SHALL NOT BE REPRODUCED OR DISCLOSED WITHOUT WRITTEN CONSENT OF NIDEC MOTOR CORPORATION

ISSUED BY: D. CORTES
APPROVED BY: M. RAMIREZ

IHP_DP_NMCA (MAR-2011) SOLIDEDGE