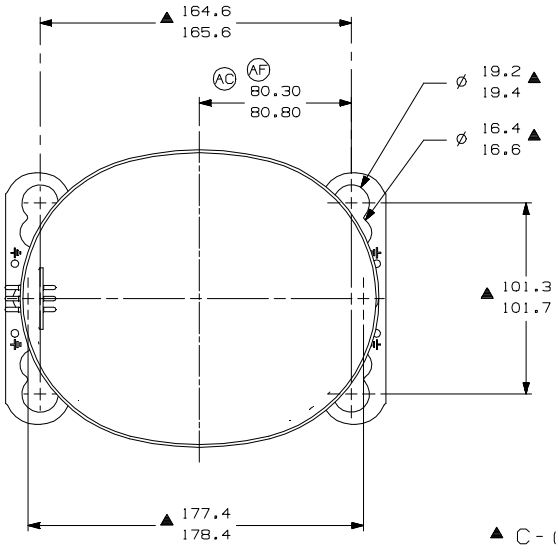


-AUXILIARY VIEW-
FASTENING DIMENSIONS

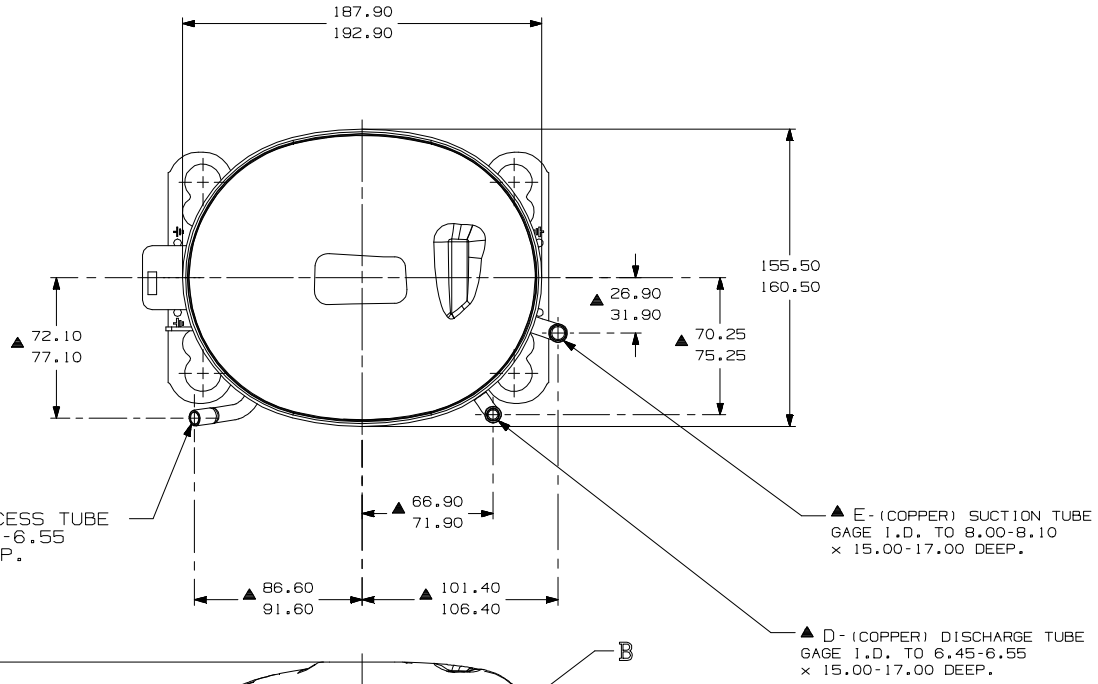


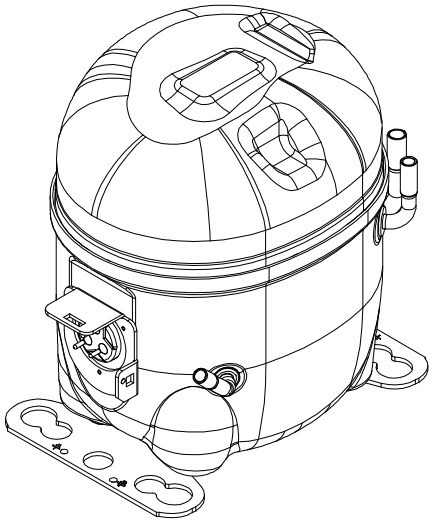

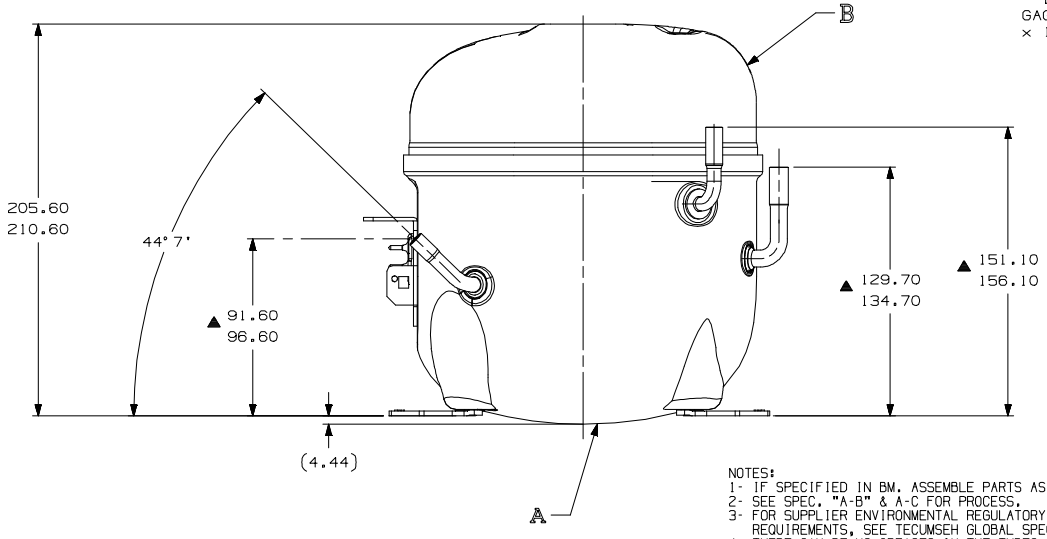


NOTES:
1- IF SPECIFIED IN BM. ASSEMBLE PARTS AS SHOWN.
2- SEE SPEC. "A-B" & A-C FOR PROCESS.
3- FOR SUPPLIER ENVIRONMENTAL REGULATORY REQUIREMENTS, SEE TECUMSEH GLOBAL SPEC. 08
4- THERE CAN BE NO CREASES IN THE TUBES. (CREASES ARE SIGNS OR MARKS THAT ARE IN SOMETHING THAT BENDS)
5- AFTER THE FOLDS IN THE TUBES, CANNOT BE ACCELERATED TO AREA EXCEEDING 30%.
AB 6- TUBES OF SUCTION, DISCHARGE AND PROCESS MUST BE FREE OF INK ON 15.8mm (5/8") FROM TOP OF THE TUBES AS SPEC. T.P.Co. A-B4.

| ITEM | PART NUMBER |
|---|---|
| A | 320-10229 |
| B | 14963286 |
| C | 14963573 |
| AD D | 580-10243 |
| E | 14963571 |

| LT | LC | CHANGE | DATE |
|---|---|---|---|
| AF | F/7 | ALTERADA MEDIDA ERA: 82.30-82.80 | EC80775 14-02-18 P3. RG. |
| AE | -- | RETIRADO DETALHE (APERTA-SENTA DE PINTURA) | EC70368 08-06-16 MP. MC. |
| AD | A/1 | ALTERADO TUBO D ERA: 14963518 | EC59687 03-03-15 P3. RG. |
| AC | F/7 | ALTERADA MEDIDA ERA:80.30-80.80 | EC48188 31-01-14 P3. RG. |
| AB | A/3 | ADICIONADO NOTA | EC52840 AMP MF 13-09-13 |
| AA | | LIBERACAO | EC45076 16/05/12 P.S. A.M. |

THIS DRAWING OR PRINT (1) IS THE PROPERTY OF TECUMSEH DO BRASIL LTDA. AND CONTAINS PROPRIETARY AND CONFIDENTIAL INFORMATION BELONGING TO TECUMSEH DO BRASIL. (11) IS LOANED TO THE RECIPIENT BY TECUMSEH DO BRASIL AND IS SUBMITTED FOR THE RECIPIENT'S EXPRESS AND SPECIFIC CONDITION THAT NEITHER IT NOR THE INFORMATION CONTAINED THEREIN OR DISCLOSED OR MADE AVAILABLE TO OTHERS WITHOUT THE EXPRESS, SPECIFIC, WRITTEN CONSENT OF TECUMSEH DO BRASIL AND THAT SUCH INFORMATION ONLY AS EXPRESSLY AUTHORIZED BY TECUMSEH DO BRASIL WRITTEN AGREEMENT WITH TECUMSEH DO BRASIL AND NOT OTHERWISE. (111) SHALL NOT BE COPIED OR TO ANY EXTENT WITHOUT TECUMSEH DO BRASIL PRIOR EXPRESS AND SPECIFIC WRITTEN CONSENT AND ALL DRAWINGS RECEIVED BY THE RECIPIENT (LATTER) IS REQUESTED PROMPTLY AFTER SUCH REQUEST IS MADE.

DO NOT SCALE THIS DRAWING. ALL FERROUS MATERIALS MUST NOT BE MAGNETIZED AS RECEIVED OR AT COMPRESSOR ASSEMBLY.

THIRD ANGLE PROJECTION
UNITS: mm
DRAWING SIZE: A2
D. A.SYMBOLS AS PROCEDURE 2.01.031 TECUMSEH OF BRAZIL
★ : CATEGORY I
▲ : CATEGORY II
■ : CATEGORY III
: CATEGORY IV

Tecumseh®

| NAME | | | PART NO. | |
|---|---|---|---|---|
| SALES COMPRESSOR | | | DCAE679 | |
| DWN. PAULO | CK. ANDRE MARTINEZ | APR. WALTER CORREA | SCALE 1:2 | PAGE 1/1 |
| DATE 19/04/12 | REF. | | FAMILY AE2 | |