Part No.	Reference No.	Quantity	Description
0000104141~S	*		BLOWER
0000104142~S	*		BURNER & INDUCER
0000104145~S	*		CABINET
0000104144~S	*		CONTROLS
0000104140~S	*		GENERAL ASSEMBLY
0000104143~S	*		HEAT EXCHANGER
0000104146~S	*		MODEL NUMBER DESCRIPTION
0000104147~S	*		OPTIONAL ACCESSORIES

Part No.	Reference No.	Quantity	Description
0000004404~P	*		BLOWER PARTS LIST

BLOWER 75013070 REV A

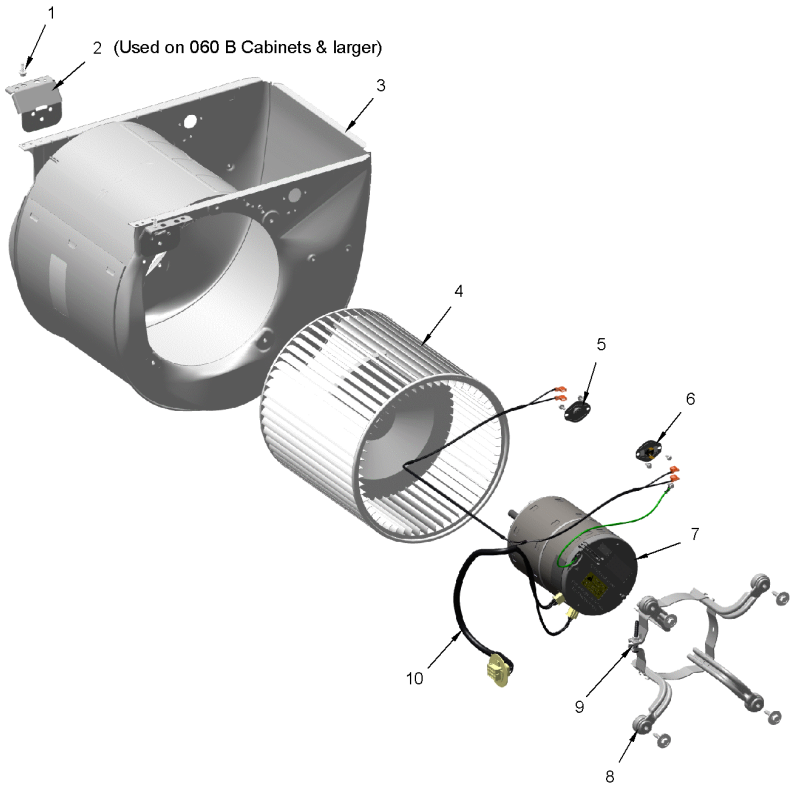

This is a typical illustration. The unit in the field may not appear exactly as shown.

Part No.	Reference No.	Quantity	Description
SCR02624	*	4	SCREW; 8-18 X 7/8, TYPE AB, HEX CAP
SCR01011	1	3	SCREW; 1/4-20 C HXW 5/8 S N
HUS04381	3	1	HOUSING; REPL-HOUSING-METALLICA 8
WHL02916	4	1	WHEEL; BLOWER, 11 IN DIA, 8 IN WIDTH, 0.50 IN BORE, CW
SWT04157	5	1	SWITCH-REVERSE FLOW
SWT04156	6	1	SWITCH-REVERSE FLOW
MOT18718	7	1	MOTOR; CONSTANT TORQUE, PROGRAMMED, 1/3 HP, 120/50-60/1, 48 FRAME, BALL BEARING
BLT01015	8	1	BOLT; BELLY BAND, 1/4-20 UNC-2B, 3/8 HEX WASHER HEAD
BND00934	9a	1	BAND; BELLY BAND ASSEMBLY, INCLUDES BAND, MOTOR LEGS, MOUNTING HARDWARE
BND00932	9b	1	BAND; MOTOR MOUNT, 17.62 LENGTH
WIR09218	10	1	WIRE; HARNESS, BLOWER, 12 PIN

Part No.	Reference No.	Quantity	Description
0000010296~P	*		BURNER & INDUCER PARTS LIST

BURNER & INDUCER

75013071

REV A

(Items 6, 7, 9, 12 & 17 are considered as non-replaceable parts)

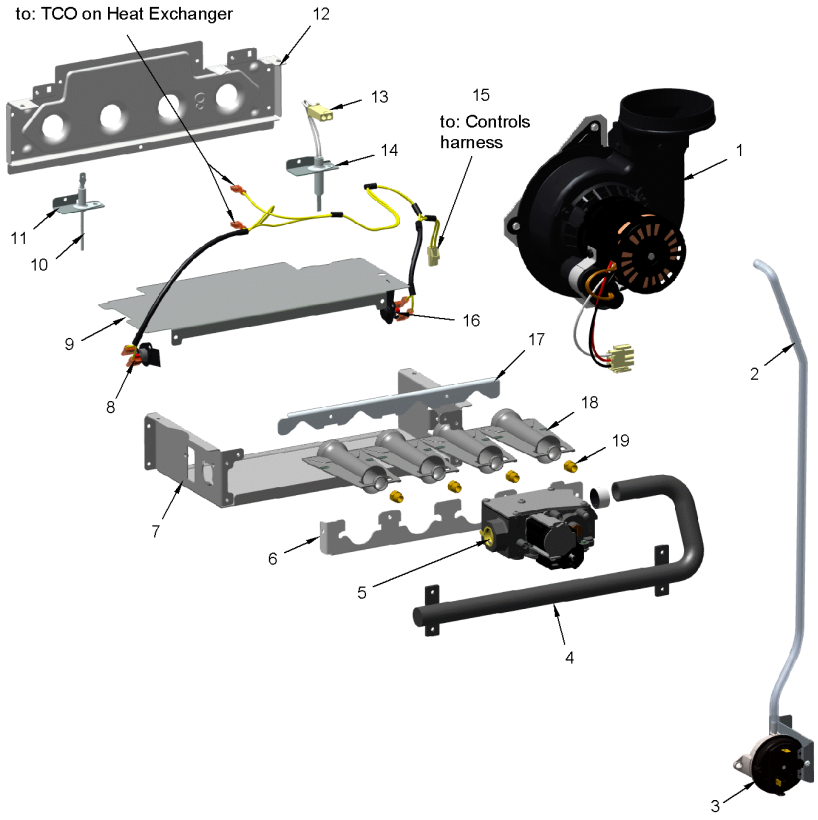

This is a typical illustration. The unit in the field may not appear exactly as shown.

Part No.	Reference No.	Quantity	Description
BLW01476	1	1	BLOWER; INDUCER-80-1.15-SP
TUB14902	2	1	TUBE; PRESSURE-HIGH-STAGE
SWT04219	3	1	SWITCH; PRESSURE-.65
MFD01442	4	1	MANIFOLD; 2
VAL09029	5	1	VALVE; GAS, SLOW OPENING 1/2-14 NPT, 24V, 50/60 HZ, "J" SERIES
HLD00625	6	1	HOLDER; 2 BURNER, 6.625 X 1.531
BOX02751	7	1	BOX; BURNER, 5.74 X 7.00 X 2.63
SWT04167	8	1	SWITCH-FLAME-ROLLOUT
PLT05658	9	1	PLATE; 2 BURNER, 7.08 X 5.61
SEN02400	10	1	SENSOR; FLAME, NIKROTHAL 80 ELECTRODE, FOR NATURAL GAS
BRK04581	11	1	BRACKET; FLAME SENSOR, 2.063 X 0.875 X 0.456
EXC02988	12	1	EXCHANGER; BURNER-FLAME-SHAPER-2-80
IGN00152	13	1	MIN=12/12 IGNITER; SILICON-NITRIDE, 120V, INCLUDES BRACKET AND SCREWS
BRK04580	14	1	BRACKET; IGNITER, 2.063 X 0.875 X 0.456
WIR08572	15	1	WIRE; HARNESS, UPFLOW, FROM CONTROLS HARNESS TO FLAME ROLLOUT SWITCHES AND THERMAL LIMITS, YELLOW WIRES
SWT04166	16	1	SWITCH-FLAME-ROLLOUT
BNR01233	18	2	BURNER; 0.50 ID INSHOT BURNER, NATURAL GAS, STAINLESS STEEL, 2.75 X 4.50
ORF01427	19	2	ORIFICE; SPUD, DRILL #45, BRASS

Part No.	Reference No.	Quantity	Description
0000010437~P	*		CABINET PARTS LIST

CABINET

75013349

REV
A

(Items 1, 9 & 11 are considered as non-replaceable parts)

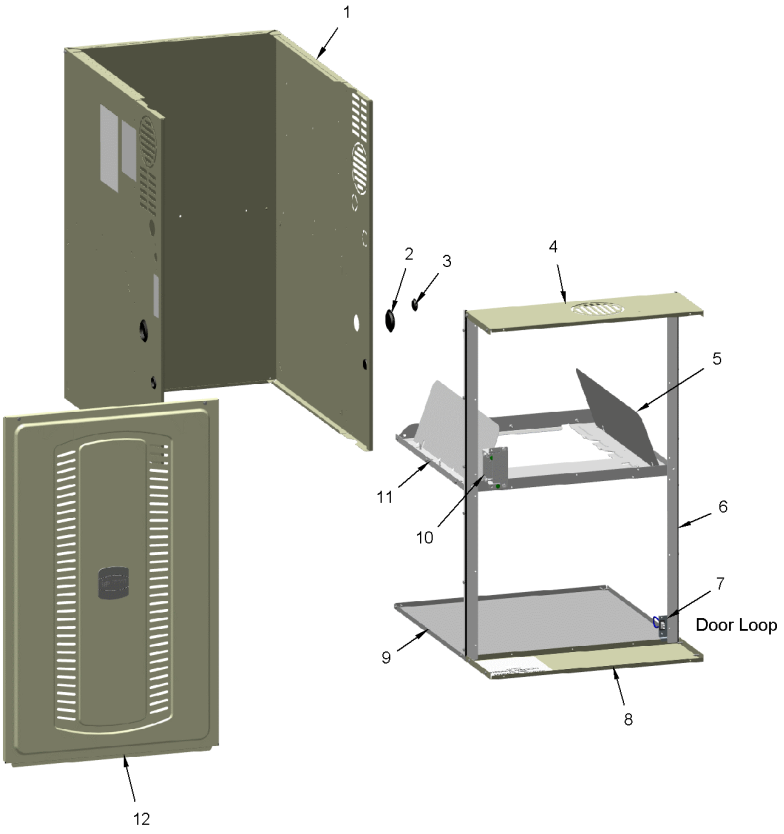

This is a typical illustration. The unit in the field may not appear exactly as shown.

Part No.	Reference No.	Quantity	Description
PAI00074	*	1	PAINT; SPRAY, SLATE GREY, FULL GLOSS(88) (SHIPPING UOM 12 OZ HAZ)
PLU01267	*	1	PLUG; GAS CONDENSATE, 2.17 OD, 1.675 ID, BLACK PLASTIC
PLU01267	2	2	PLUG; GAS CONDENSATE, 2.17 OD, 1.675 ID, BLACK PLASTIC
PLU01268	3	3	PLUG; ELECTRICAL, 1.19 OD, 0.875 ID, BLACK PLASTIC
SUP06396	4	1	SUPPORT; CROSSMEMBER-80-B
VNE01869	5	2	VANE; GUIDE
SUP05943	6	2	SUPPORT; SIDE, 33.74 X 1.07 X 1.07
WIR05160	7	1	WIRE; HARNESS, 2 PIN DF, 5 INCH BLACK WIRE
SUP06472	8	1	SUPPORT; CMEMBER-BOTTOM-80B
PNL32370	9	1	PANEL; BOTTOM, 20.92 X 17.58
BOX02750	10	1	BOX; ASSEMBLY, JUNCTION, INCLUDES TOP, BASE, SCREWS & BUSHING
DOR04529	12a	1	DOOR; ASM-S8B1-B SIZE
PLT05665	12b	1	PLATE; AMERICAN STANDARD BADGE, 3.17 X 3.00
PLT05664	12c	1	PLATE; TRANE BADGE, 3.17 X 3.00

Part No.	Reference No.	Quantity	Description
0000010480~P	*		CONTROLS PARTS LIST

CONTROLS 75013069 REV A

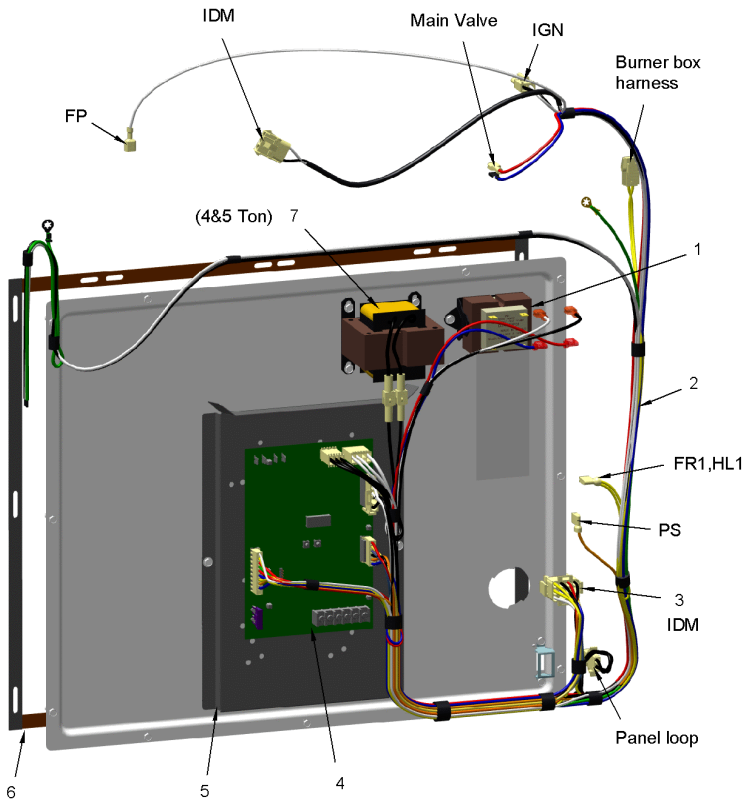

This is a typical illustration. The unit in the field may not appear exactly as shown.

Part No.	Reference No.	Quantity	Description
TRR02736	1	1	TRANSFORMER; 115V-24V, 35VA, 60 HZ, CLASS 2
WIR09219	2	1	WIRE; HARNESS, POWER & CONTROLS, NO CHOKE
CON00105	3	1	CONNECTOR; HOUSING; 12 CKT SOCKET HSG MALE
CNT07872	4	1	CONTROL; IFC-1-CTM (THE CNT07639 PRINTED DIRECTLY ON THE IFC IS THE SAME PART AS CNT07872)
GKT05000	5	1	GASKET; VESTIBULE GASKETS, ONE SIZE FITS ALL - TRIM TO FIT
SHD00602	6	1	SHIELD; BRACKET-IFC, SHEET METAL, 5.91 X 9.03

Part No.	Reference No.	Quantity	Description
0000010416~P	*		GENERAL ASSEMBLY GRAPHIC

S-SERIES FURNACE 80% 75013348 REV A

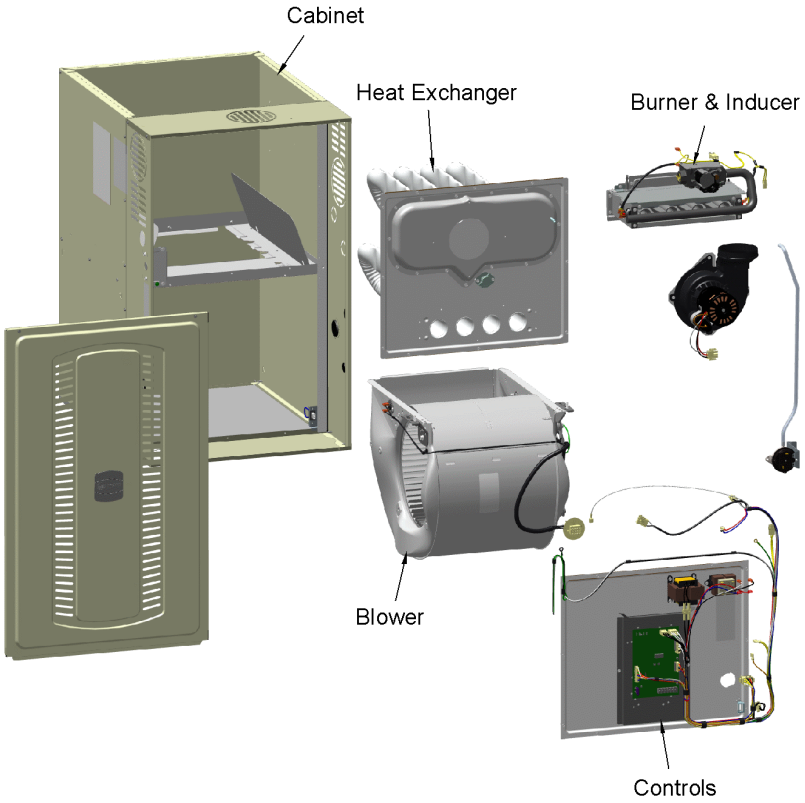

This is a typical illustration. The unit in the field may not appear exactly as shown.

Part No.	Reference No.	Quantity	Description
0000004461~P	*		HEAT EXCHANGER PARTS LIST

HEAT EXCHANGER

75013381

REV
A

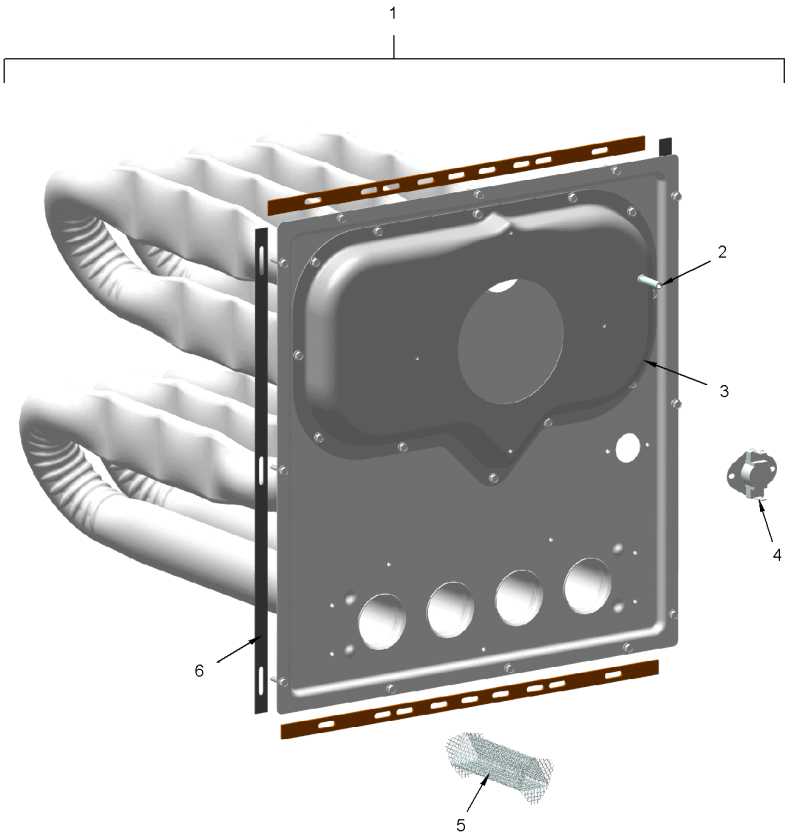

The Thermal Limit Switch (TCO) & Mesh Inserts are not included with the Heat Exchanger.

This is a typical illustration. The unit in the field may not appear exactly as shown.

Part No.	Reference No.	Quantity	Description
EXC02809	1	1	EXCHANGER; HX-ASM-80-B40
TUB08301	2	1	TUBE; PRESSURE SWITCH, STAINLESS STEEL, .025 O.D. .035 WALL THK.
BOX03706	3	1	BOX; FLUE, INCLUDES TUB08301
SWT04169	4	1	SWITCH-THERMAL
GKT05000	5	1	GASKET; VESTIBULE GASKETS, ONE SIZE FITS ALL - TRIM TO FIT
SRN01074	6	2	SCREEN; LOW NOX INSERT

Part No.	Reference No.	Quantity	Description
0000005337~P	*		MODEL NUMBER GRAPHIC

MODEL NUMBER DESCRIPTION

75011116

REV B

S-SERIES FURNACE

Example Model Number:

S 9 V 2 B 0 8 0 U 3 P S A A A

1 - - - 5 - - - - 10 - - - - 15

Digit 1 – Level
S = Series
L = 14 ng/J Ultra-Low NOx

Digit 2 – AFUE
8 = 80%
9 = 90% or higher

Digit 3 – Blower Type
B = Builder Series (May be PSC or CTM)
P = PSC
X = CTM
V = Variable Speed

Digit 4 – Gas Valve Stages
1 = SingleStage
2 = 2 Stage
M = Modulating

Digit 5 – Cabinet Width
A = 14.5 wide
B = 17.5 wide
C = 21.0 wide
D = 24.5 wide

Digits 6,7,8 – BTU input
080 = 80,000 BTUH

Digit 9 – Poise Options
U = 3 way
D = Dedicated Downflow
M = 4 Way Poise

Digit 10 – Airflow Capacity for Cooling
2 = 2 Tons
3 = 3 Tons
4 = 4 Tons
5 = 5 Tons

Digit 11 – Inducer Type
P = PSC
X = CTM
V = Variable Speed

Digit 12 – Communicating capability
S = 24 Volt
C = Communicating System Control
T = 24 Volt, 40ng/J NOx
D = Communicating System Control, 40ng/J NOx

Digit 13 – Major Design Change

Digit 14 – Minor Design Change

Digit 15 – Service Digit Change

Part No.	Reference No.	Quantity	Description
0000010501~P	*		OPTIONAL ACCESSORIES LIST

Part No.	Reference No.	Quantity	Description
BAYBASE205	*	1	BASE; SUB ASSEMBLY, DOWNFLOW
BAYFLTR203	*	1	FILTER; FRAMED FILTER KIT ASSY (BAYFLTR203) FOR REPLACEMENT FILTER ONLY USE FLR01611
BAYFLTR206	*	1	FILTER; ACCESS DOOR KIT (DOWNFLOW ONLY)
BAYHANG	*	1	HORIZONTAL HANGER KIT
BAYLIFTB	*	1	KIT-DUAL-RETURN-B-SIZE
BAYLPSS400B	*	1	BAYLPSS400B; LP CONVERSION KIT, INCLUDES (6) STAINLESS BURNERS, SEN02662, KIT01495 & KIT07611
BAYSWT21AHALTA	*	1	KIT; HIGH ALTITUDE PRESSURE SWITCH
BAYVENT600A	*	1	KIT- DOWNFLOW ADAPTER
BAYVENT800B	*	1	KIT; MASONRY CHIMNEY
PIP02095	*	1	PIPE; U-BEND, STEEL, 1/2-14 NPT, 3.42 X 2.00