SMART sense®
by Uni-Line®

SMART 1000
Touchscreen Thermostat
Installation Manual

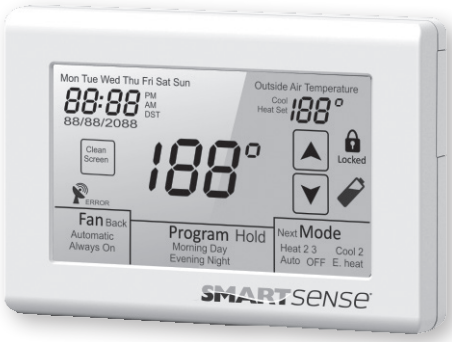

www.robertshaw.com

©2015 Robertshaw

12/15 – 352-00242-001

IMPORTANT SAFETY INFORMATION

	**WARNING: ELECTRICAL SHOCK HAZARD – Turn off power at the main power source by unscrewing fuse or switching circuit breaker to the OFF position before installing, removing, or cleaning this thermostat.**
	**WARNING: FIRE AND ELECTRIC SHOCK HAZARD – This device should be installed by a qualified service technician with due regard for safety as improper installation could result in a fire and electric shock hazard.**
	**WARNING: FIRE AND ELECTRICAL SHOCK HAZARD – This is a 24V AC low-voltage thermostat. Do not install on voltages higher than 30V AC.**

- Do not switch system to cool if the temperature is below 50°F (10°C). This can damage your cooling system and may cause personal injury.
- Do not short (jumper) across terminals on the gas valve or at the system control to test installation. This will damage the thermostat and void the warranty.
- Do not connect ground to any terminal in this unit.
- All wiring must conform to local and national building and electrical codes and ordinances.
- Use this thermostat only as described in the manual.

TABLE OF CONTENTS

Introduction 4

Getting Started 5

Installing the Thermostat 6, 8
- Disassembly 6
- Thermostat Location 6
- Mounting the Subbase 6, 7
- Terminal Designations 8

Setting the System Switches 9

System Switch Functions 10

Installing the Batteries 11

Typical System Wiring Diagrams 12, 20
- Heat only (Gas) 12
- Heat only (Electric) 13
- Cool only (Single or Multi-stage) 14
- 1 Heat / 1 Cool (Gas) 15
- 2 Heat / 2 Cool (Gas) 16
- 2 Heat / 1 Cool (Heat Pump) 17
- 3 Heat / 2 Cool (Heat Pump) 18

TABLE OF CONTENTS

2 Heat / 1 Cool (Fossil Fuel) 19
3 Heat / 2 Cool (Fossil Fuel) 20

Installer Setup Menu 21,38
Entering the Setup Menu 21
Selecting Programmable or Non-programmable Operation 22
Selecting Number of Program Events 23
Selecting Mode 24
Selecting Programmable Fan 25
Assigning Auxiliary Contacts 26
Selecting Touchscreen Lock Options 27
Selecting the Cooling Setpoint Limit 28
Selecting the Heating Setpoint Limit 29
Selecting Back Light Option 30
Selecting Adaptive Recovery Option 31
Selecting First Stage Heating and Cooling Differential Option 32
Selecting Second Stage Heating and Cooling Differential Option 33
Selecting Third Stage Heating Differential Option 34
Selecting Demand Staging or Locked Staging Option 35
Sensor Calibration 36
Selecting Low Balance Point Option 37
Selecting High Balance Point Option 38
Selecting Temperature Display Format....39
Enabling E.HEAT Mode....40

TABLE OF CONTENTS

Remote Sensor Installation 41, 43
- Remote Sensor Types 41
- SMART-R-02 Indoor Sensor Installation 41, 42
- SMART-R-03 Outdoor Sensor Installation 42
- Temperature/Resistance Chart 43

Display Functions 44

Testing 45, 49
- Fan Operation 45
- Conventional Heating 45
- Conventional Cooling 45, 46
- Conventional Heat Pump 46
- Fossil Fuel 47
- Low Balance Point 47, 48
- High Balance Point 48
- Adaptive Recovery 48, 49
- Programmable Fan 49
- Auxiliary Contacts 49

Basic Troubleshooting 50, 51

Specifications 52

INTRODUCTION

The SMART 1000 is a feature-rich touchscreen thermostat that can be battery powered or hardwired to the HVAC equipment. Using a common sense approach to the installation will ensure this product is installed properly and to the customer's satisfaction. Please take time to read and understand this manual so that installation and testing is performed in an efficient manner.

This manual is to be used in conjunction with the supplied Owners Manual.

Although great care has been taken in the preparation of this manual, Uni-Line® takes no responsibility for errors or omissions contained herein. It is the responsibility of the installer to ensure that this thermostat and the equipment connected to it operate in a safe and efficient manner.

Due to ongoing product improvements, Uni-Line reserves the right to change the specifications of the SMART 1000 thermostat or its components without notice.
All rights reserved.
© Uni-Line
Intellectual rights apply.

GETTING STARTED

As with any HVAC project, careful installation is the key to a successful outcome. Time taken during the installation process will be rewarded with fewer call-backs.

The steps required to install the SMART 1000 thermostat are as follows.

1. Read and understand this Installation Manual and Owners Manual.
2. Mount and wire the subbase.
3. Install the batteries.
4. Set the 4 system switches to match the equipment application.
5. Wire optional remote temperature sensor(s).
6. Power the thermostat
7. Set the Advanced Installer settings.
8. Test the thermostat.

INSTALLING THE THERMOSTAT

DISASSEMBLY

There are two release slots located on the bottom of the thermostat. Gently push the flat blade of a small screwdriver into one slot at a time and pry upward until the catch disengages. Carefully swing the thermostat upward and away from the subbase. (Figure 1)

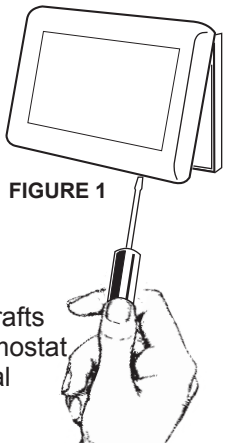

FIGURE 1

THERMOSTAT LOCATION

The SMART 1000 should be installed in a location that represents the ambient space temperature. Do not install the thermostat in an area where drafts are present, near the floor, behind doors or on an external wall. Avoid placing the thermostat in areas where the air movement is limited, affected by direct sunlight or other areas not represented by typical of the temperature in the space.

MOUNTING THE SUBBASE

When mounting the SMART 1000 subbase, be aware that drafts may travel down wall cavities and enter the back of the thermostat through the control wire hole in the wall. It is important to seal the hole to prevent any drafts that might affect the internal temperature sensor.

INSTALLING THE THERMOSTAT

Pull the control wires through the large opening in the thermostat subbase. Next, level and mount the subbase on the wall using the supplied anchors and screws. (Figure 2)

Do not over tighten the mounting screws as the subbase may warp causing the improper seating of the thermostat connecting pins to the terminal blocks.

Use a properly sized screwdriver and back each screw terminal out (counter clockwise) before landing each wire to its dedicated terminal. Do not over tighten the terminal screws. Check to ensure that all wires are landed correctly and dressed properly to prevent any shorts. Refer to Typical System Wiring Diagrams in this manual for proper wiring.

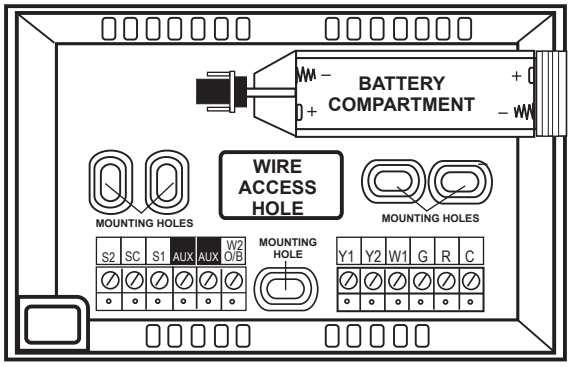

FIGURE 2

INSTALLING THE THERMOSTAT

TERMINAL DESIGNATIONS

TERMINAL	DESIGNATION
S2	Outdoor Sensor
SC	Sensor Common
S1	Indoor Sensor
AUX	Auxiliary Contacts
W2/OB	Second Stage Heat or Reversing Valve
Y1	First Stage Cool or First Stage Compressor
Y2	Second Stage Cool or Second Stage Compressor
W1	First Stage Heat/Auxiliary/Emergency Heat
G	Fan
R C	24V AC Hot 24V AC Common

SETTING THE SYSTEM SWITCHES

The SMART 1000 contains a set of four system switches located on the thermostat printed circuit board. (Figure 3) The switches are used to match the thermostat operation and relay outputs with the HVAC system requirements. Refer to the system switch functions on the next page to properly configure the thermostat.

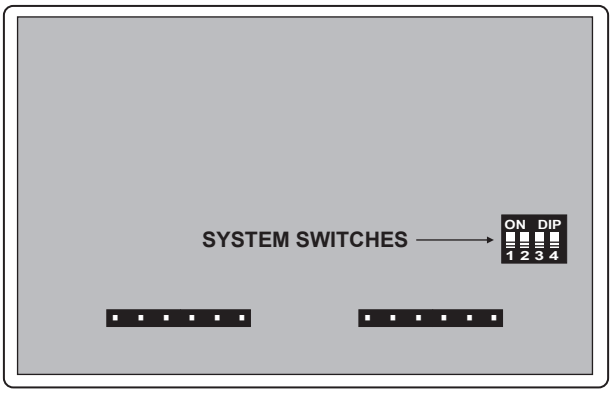

FIGURE 3

SYSTEM SWITCH FUNCTIONS

Switch 1 - Equipment Type	**OFF** Heat / Cool (Default). **ON** For heat pump equipment.
Switch 2 - Fan or Reversing Valve	**When Switch 1 is OFF (Heat Cool Mode)** **OFF** Gas Heat - Heater controls fan (Default). **ON** Electric Heat -Thermostat calls fan with heat. **When Switch 1 is ON (Heat Pump Mode)** **OFF** Heat pump 'O' reversing valve in cool. **ON** Heat pump 'B' reversing valve in heat.
Switch 3 - Equipment Stages	**OFF** 1 heat / cool gas / electric or 2 heat/1 cool HP. **ON** 2 heat /2 cool gas / electric or 3 heat/2 cool HP
Switch 4 - Fossil Fuel Mode	**OFF** Conventional heat pump equipment (Default). **ON** Fossil fuel equipment, (Used in the USA mostly)

INSTALLING THE BATTERIES

The SMART 1000 comes with two AA batteries. Even if the thermostat is hardwired, battery backup is recommended to maintain the real-time clock in the event of a power failure. All other memory is non-volatile in the event of battery or primary power loss. Press in on the battery access compartment and slide the drawer out. Install the two AA batteries matching the + and - orientation. Push the battery compartment in until it clicks shut. When the batteries are properly installed, the touchscreen display will light up. (Figure 4)

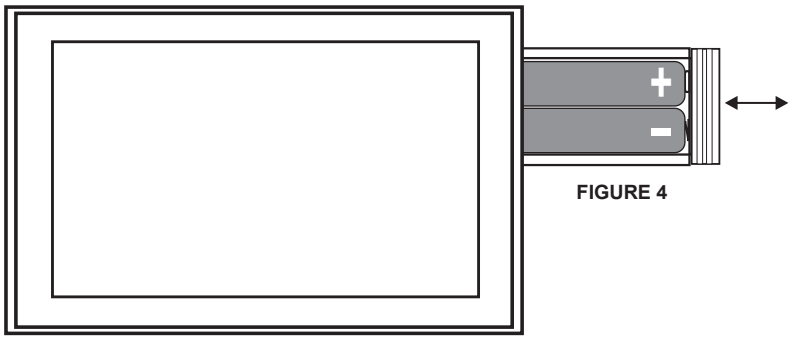

FIGURE 4

TYPICAL SYSTEM WIRING DIAGRAMS

HEAT ONLY (GAS)

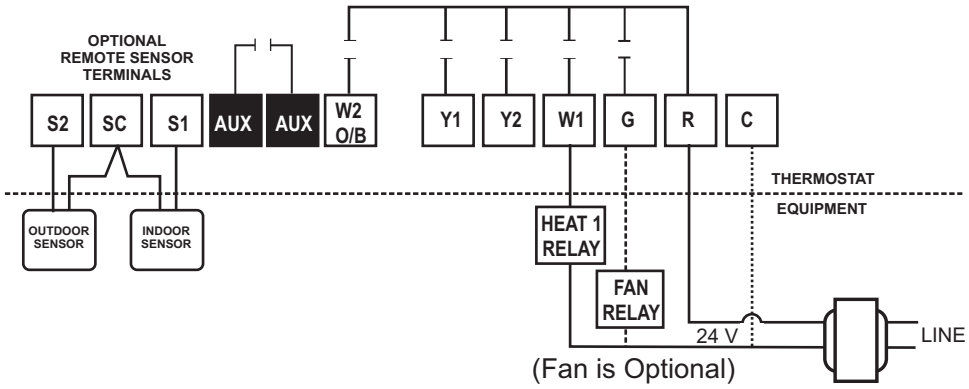

Switch Settings

Switch 1 = **OFF**	Heat/Cool
Switch 2 = **OFF**	Equipment controls fan on call for heat
Switch 3 = **OFF**	Single Stage
Switch 4 = **OFF**	Leave OFF

TYPICAL SYSTEM WIRING DIAGRAMS

HEAT ONLY (ELECTRIC)

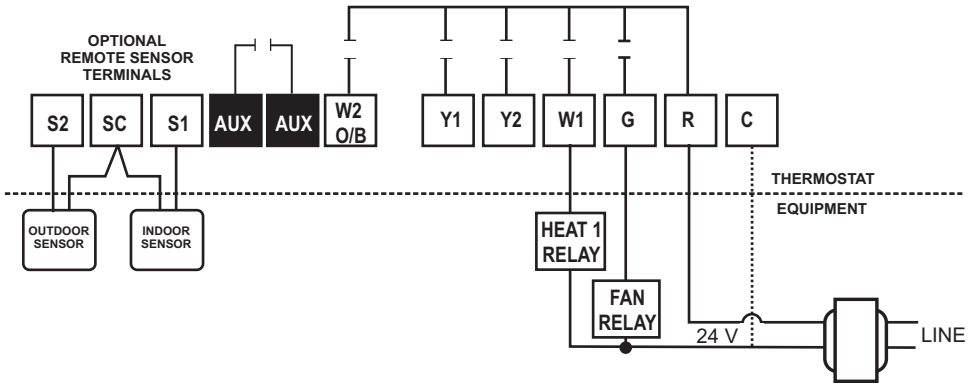

Switch Settings

Switch 1 = **OFF**	Heat/Cool
Switch 2 = **ON**	Thermostat controls fan on call for heat
Switch 3 = **OFF**	Single Stage
Switch 4 = **OFF**	Leave OFF

TYPICAL SYSTEM WIRING DIAGRAMS

COOL ONLY (SINGLE OR MULTI-STAGE)

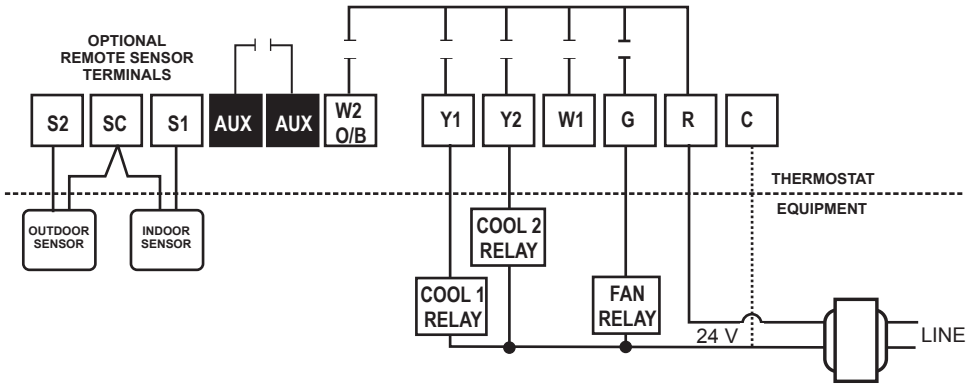

Switch Settings

Switch 1 = **OFF**	Heat/Cool
Switch 2 = **OFF**	Fan energized on call for cooling
Switch 3 = **OFF/ON**	**OFF** = Single Stage **ON** = Multi-stage
Switch 4 = **OFF**	Leave OFF

TYPICAL SYSTEM WIRING DIAGRAMS

1 HEAT/1 COOL (GAS)

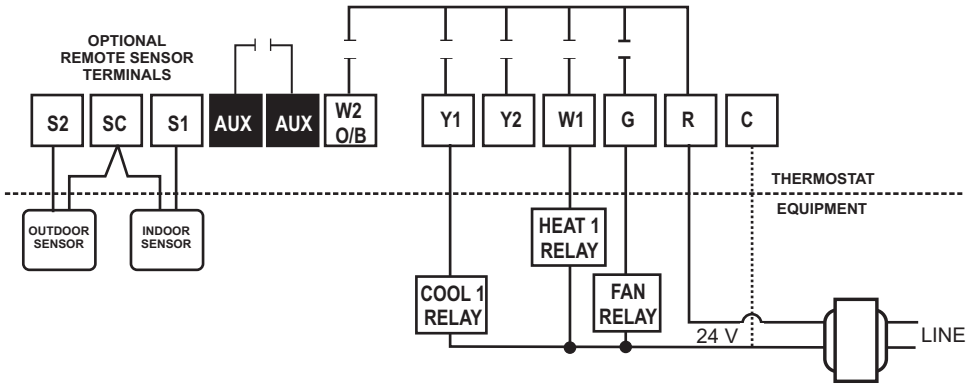

Switch Settings

Switch 1 = **OFF**	Heat/Cool
Switch 2 = **OFF**	Fan energized on call for cooling
Switch 3 = **OFF**	Single Stage
Switch 4 = **OFF**	Leave OFF

TYPICAL SYSTEM WIRING DIAGRAMS

2 HEAT/2 COOL (GAS)

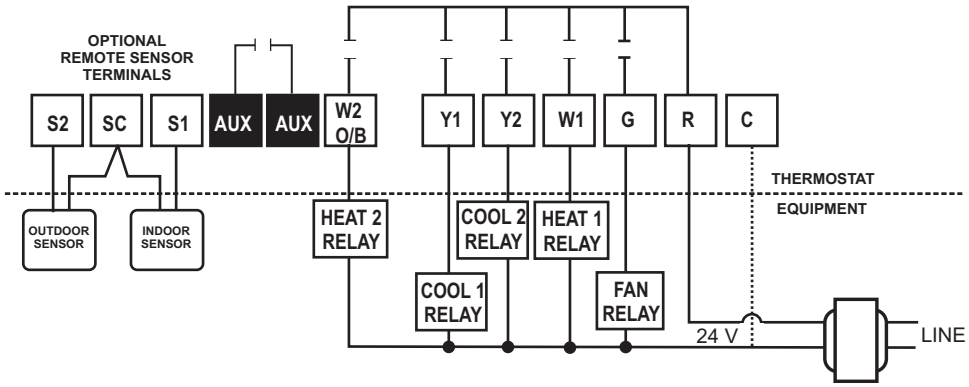

Switch Settings

Switch 1 = **OFF**	Heat/Cool
Switch 2 = **OFF**	Fan energized on call for cooling
Switch 3 = **ON**	Multi-stage
Switch 4 = **OFF**	Leave OFF

TYPICAL SYSTEM WIRING DIAGRAMS

2 HEAT/1 COOL (HEAT PUMP)

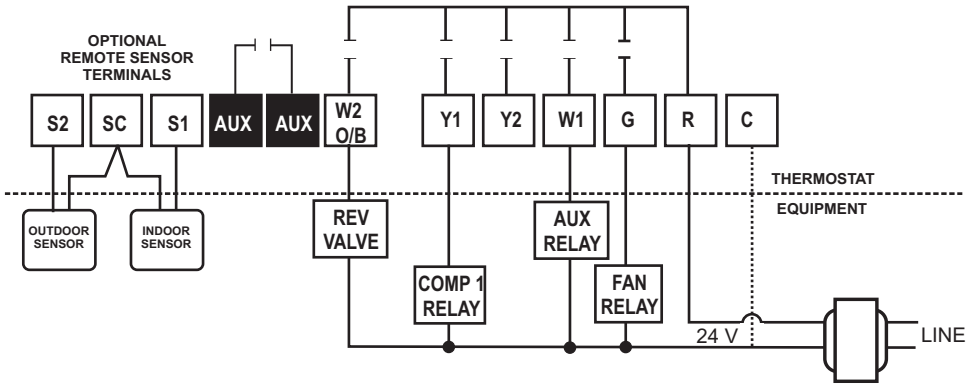

Switch Settings

Switch 1 = **ON**	Heat Pump
Switch 2 = **OFF/ON**	**OFF** = 'O' Cool **ON** = 'B' Heat
Switch 3 = **OFF**	2 Heat/1 Cool HP
Switch 4 = **OFF**	Leave OFF

TYPICAL SYSTEM WIRING DIAGRAMS

3 HEAT/2 COOL (HEAT PUMP)

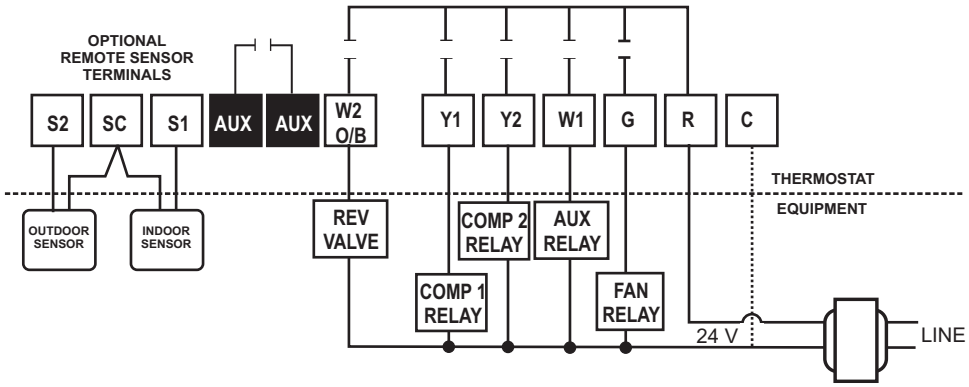

Switch Settings

Switch 1 = **ON**	Heat Pump
Switch 2 = **OFF/ON**	**OFF** = 'O' **ON** = 'B'
Switch 3 = **ON**	3 Heat/2 Cool HP
Switch 4 = **OFF**	Leave OFF

TYPICAL SYSTEM WIRING DIAGRAMS

2 HEAT/1 COOL (FOSSIL FUEL)

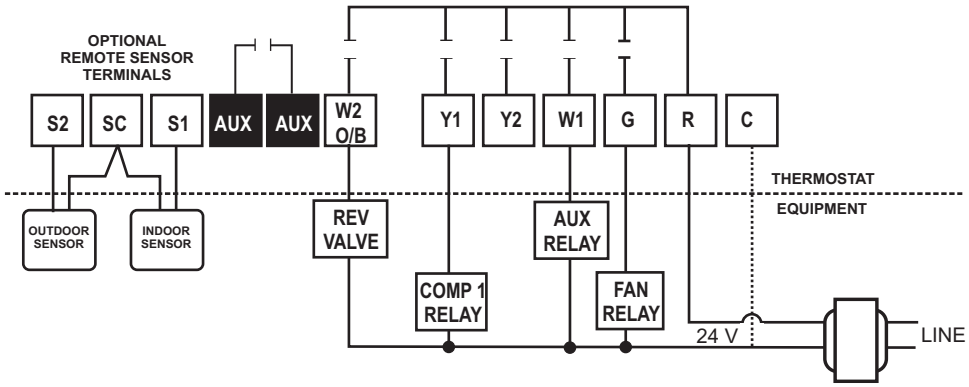

Switch Settings

Switch 1 = **ON**	Heat Pump
Switch 2 = **OFF/ON**	**OFF** = 'O' **ON** = 'B' Reversing Valve
Switch 3 = **OFF**	2 Heat/1Cool fossil fuel
Switch 4 = **ON**	Locks out heat pump when furnace is energized

TYPICAL SYSTEM WIRING DIAGRAMS

3 HEAT / 2 COOL (FOSSIL FUEL)

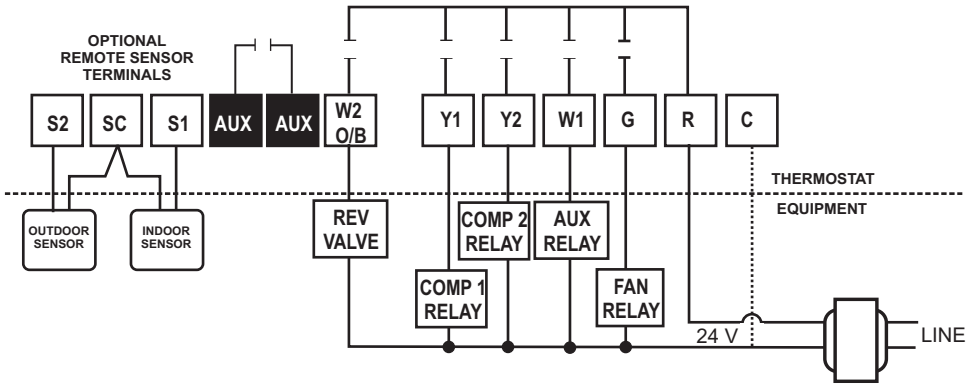

Switch Settings

Switch 1 = **ON**	Heat Pump
Switch 2 = **OFF/ON**	**OFF** = 'O' **ON** = 'B' Reversing Valve
Switch 3 = **ON**	3 heat / 1 cool fossil fuel
Switch 4 = **ON**	Locks out heat pump when furnace is energized

INSTALLER SET-UP MENU

ENTERING THE SET-UP MENU

Tap the display to bring on the back light then touch and hold both the **Clock** and **Mode** section for 5 seconds to enter the Installer Menu.

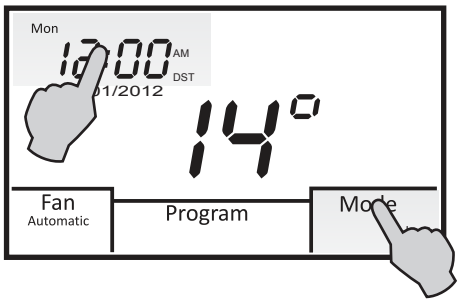

- **To advance through the menu, touch the Mode (Next) section.**
- **To back up in the menu, touch the Fan (Back) section.**
- **To exit the menu at any time and save changes, touch and hold the Next (Mode) section until the display shows normal operation.**

INSTALLER SET-UP MENU

SELECTING THE PROGRAMMABLE OR NON-PROGRAMMABLE OPERATION

The first menu 01 selects programmable or non-programmable operation. Press the **UP** or **DOWN** arrows to change the selection.

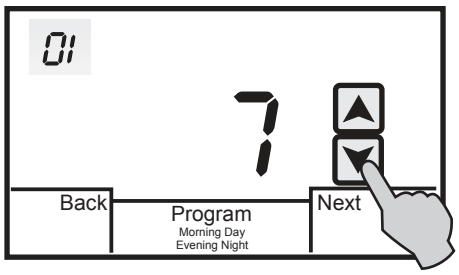

7 = 7-Day Programmable (Factory Default)
0 = Manual Mode (Non-programmable)

INSTALLER SET-UP MENU

SELECTING NUMBER OF PROGRAM EVENTS
(ONLY DISPLAYED WHEN 01 = 7)
If menu 01 is set to 7, the thermostat can be configured for 4 or 2 schedules per day.

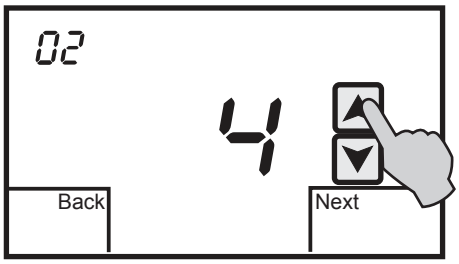

4 = 4 schedules per day (Factory Default)
2 = 2 schedules per day

INSTALLER SET-UP MENU

SELECTING MODE

Menu 03 selects the mode of operation. The factory default is **1** for Manual changeover.

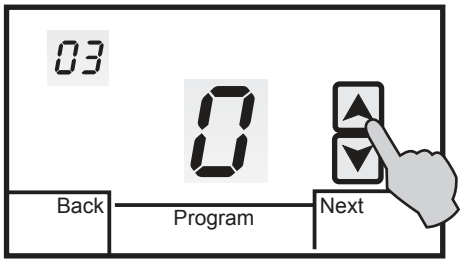

0 = Auto-changeover (Heat/Cool/Auto/Off for Heat/Cool)
(Heat/Cool/Auto/E.Heat/Off for Heat Pump
1 = Manual Changeover (Heat/Cool/Off) or (Heat/Cool/E.Heat/Off)
(Factory Default)
2 = Heating Only (Heat/Off) or (Heat/E.Heat/Off)
3 = Cooling Only (Cool/Off)

INSTALLER SET-UP MENU

SELECTING PROGRAMMABLE FAN

Menu 04 selects the Programmable Fan option which allows selecting continuous or auto fan operation for each program event when programmable mode is selected. The factory default is **0**.

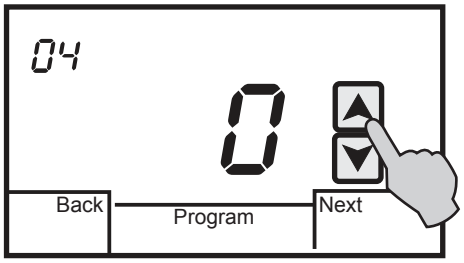

0 = No Programmable Fan (Factory Default)
1 = Programmable Fan

Refer to the Owners Manual for selecting continuous or auto fan for each scheduled event when the Programmable Fan option is ON.

INSTALLER SET-UP MENU

ASSIGNING AUXILIARY CONTACTS

Menu 05 assigns the auxiliary dry relay contacts (AUX) as Normally Open or Normally closed when the Programmable Fan Option 04 is ON. Whenever Programmable Fan is in the **Always On** mode (constant ventilation) for a selected program period, the relay contact will go open or closed based on the auxiliary relay option selection. The auxiliary contacts can be used for controlling an economizer or other IAQ devices. The factory default is **1**.

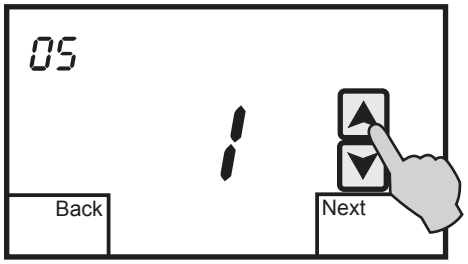

1 = Relay contacts closed when Programmable Fan is ON (Factory Default)
2 = Relay contacts open when Programmable Fan is ON

INSTALLER SET-UP MENU

SELECTING TOUCHSCREEN LOCK OPTIONS

Menu 06 allows you to prevent changes to all or part of the touchscreen functions. The factory default is **0**. Touch the **UP** or **DOWN** arrows to change the selection.

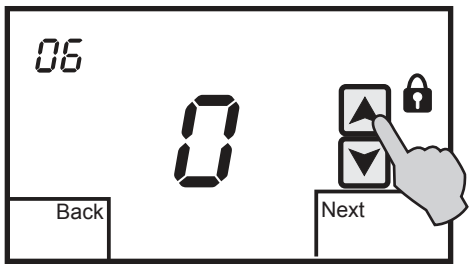

0 = All functions unlocked (Factory Default)
1 = All functions locked except setpoint adjustment
2 = All functions locked

INSTALLER SET-UP MENU

SELECTING THE COOLING SETPOINT LIMIT
Menu 07 selects the minimum cooling setpoint. The factory default is **50°F (10°C)**
Touch the **UP** or **DOWN** arrows to adjust the limit from 43° - 122°F (6° - 50°C).

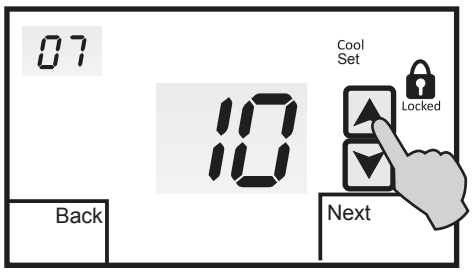

INSTALLER SET-UP MENU

SELECTING THE HEATING SETPOINT LIMIT

Menu 08 selects the maximum heating setpoint limit. The factory default is **90°F (32°C).** Touch the **UP** or **DOWN** arrows to adjust the limit from 41° - 120°F (5° - 49°C).

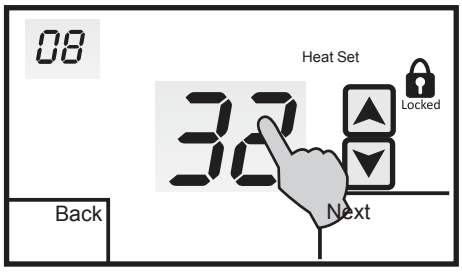

INSTALLER SET-UP MENU

SELECTING BACKLIGHT OPTION

Menu 09 allows you to select the backlight option. The factory default is **ON**. Touch the **UP** or **DOWN** arrows to change the display option.

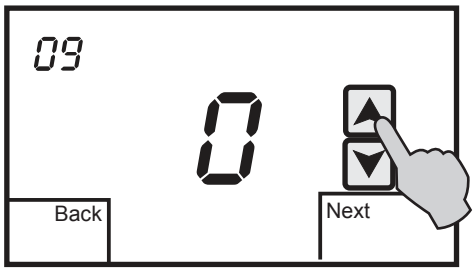

0 = Backlight on for 10 seconds when screen is touched

1 = Backlight on high for 10 seconds when screen is touched and then low continuously. (Thermostat must be hardwired to 24V AC for this option)

INSTALLER SET-UP MENU

SELECTING ADAPTIVE RECOVERY OPTION

Menu 10 allows you to select the Adaptive Recovery option. **Only displayed when menu option 01 is set to 7**. Adaptive Recovery compares the space temperature deviation from setpoint and rate of recovery history to bring the equipment on and reach the setpoint at the scheduled start time. The factory default is **0**. Touch the **UP** or **DOWN** arrows to select this option.

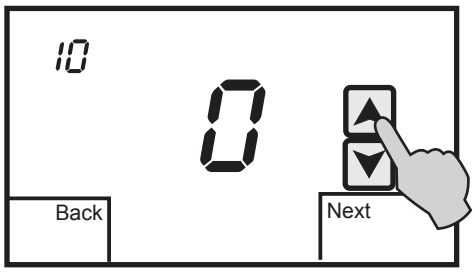

0 = No Adaptive Recovery (Factory Default)
1 = Adaptive Recovery On (For programmable mode only)

INSTALLER SET-UP MENU

SELECTING FIRST STAGE HEATING AND COOLING DIFFERENTIAL OPTION

Menu 11 is used to adjust the heating and cooling differential. The factory default is **1**=1°F (0.5°C). This represents the temperature above the cooling setpoint or below the heating setpoint when the equipment is energized. Touch the **UP** or **DOWN** arrows to change the differential.

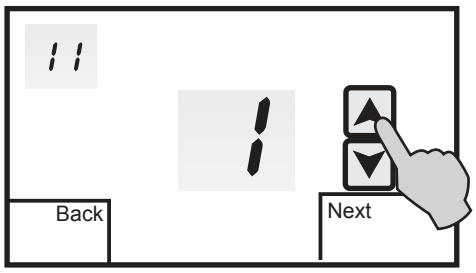

1 = 1°F (0.5°C) Differential
2 = 2°F (1.0°C) Differential
3 = 3°F (1.5°C) Differential

INSTALLER SET-UP MENU

SELECTING SECOND STAGE HEATING AND COOLING DIFFERENTIAL OPTION

Menu 12 is used to adjust the second stage heating and cooling differential. The factory default is **1**=1°F (0.5°C).This represents the temperature above the first stage cooling differential or below the first stage heating differential when second stage is energized. There is a 3 minute time delay before second stage is energized. Touch the **UP** or **DOWN** arrows to change the differential.

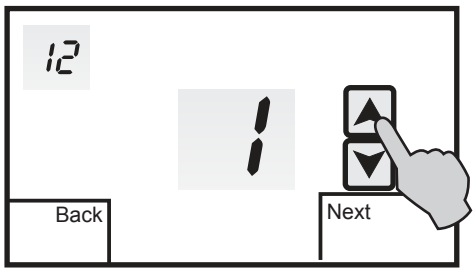

Adjustable from 1 - 5°C in 0.5°C increments

INSTALLER SET-UP MENU

SELECTING THIRD STAGE HEATING DIFFERENTIAL OPTION

Menu 13 is used to adjust the third stage heating differential. **Only displayed when SW 3 is ON.** The factory default is **1**=1°F (0.5°C). This represents the temperature below the second stage heating differential when third stage heat is energized. There is a 3 minute time delay before third stage heat is energized. Touch the **UP** or **DOWN** arrows to change the differential.

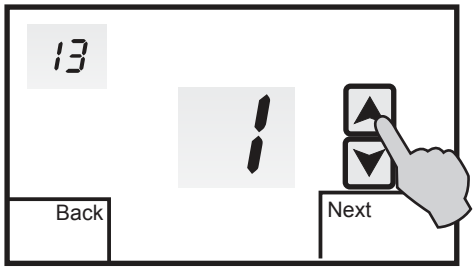

Adjustable from 1 - 5°C in 0.5°C increments

INSTALLER SET-UP MENU

SELECTING DEMAND STAGING OR LOCKED STAGING OPTION

Menu 14 is used to select how the thermostat will stage the equipment. The factory default is **0** which = **Demand Staging**. Demand Staging allows the thermostat to upstage or downstage the equipment based on the stage differential settings. **1** = **Locked Staging**. Locked Staging allows the thermostat to upstage the equipment based on the stage differential settings but locks in each stage until the setpoint is reached. (No down-staging)

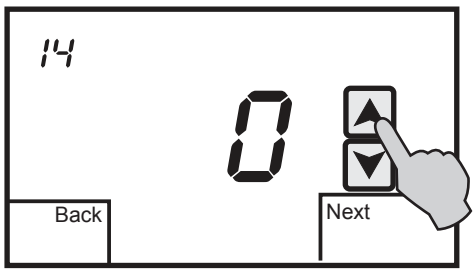

0 = Demand Staging (Factory Default)

1 = Locked Staging

INSTALLER SET-UP MENU

SENSOR CALIBRATION

Menu 15 allows you to re-calibrate the internal or a single indoor remote sensor. When a remote sensor is wired to the SC and S1 terminals, the internal sensor is automatically disabled. The factory default is **0** . Touch the **UP** or **DOWN** arrows to adjust the calibration from -5° to +5°F/C .

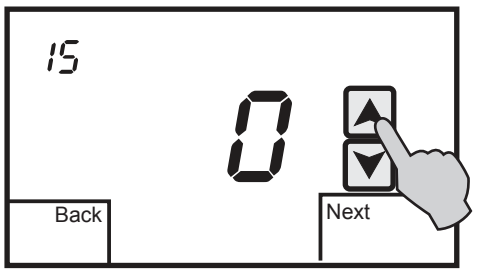

INSTALLER SET-UP MENU

SELECTING LOW BALANCE POINT OPTION

Menu 16 allows you to select a low balance point setting when the thermostat is configured for Heat Pump or Fossil Fuel and an outdoor sensor is used. When the outdoor temperature falls below the balance point setting, the compressor is locked out and only auxiliary electric heat or fossil fuel furnace is used for heating. The factory default is **OFF**. Touch the **UP** or **DOWN** arrows to select a low balance point setting.

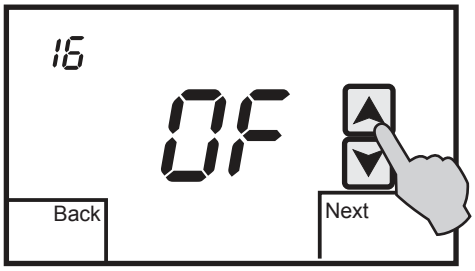

Adjustable from OFF, -17° to 25°C
Remote outdoor sensor must be used

INSTALLER SET-UP MENU

SELECTING HIGH BALANCE POINT OPTION

Menu 17 allows you to select a high balance point setting when the thermostat is configured for Heat Pump or Fossil Fuel. When the outdoor temperature rises above the balance point setting, the auxiliary electric heat or fossil fuel furnace is locked out and only the heat pump is used for heating. The factory default is **OFF**. Touch the **UP** or **DOWN** arrows to select a low balance point setting.

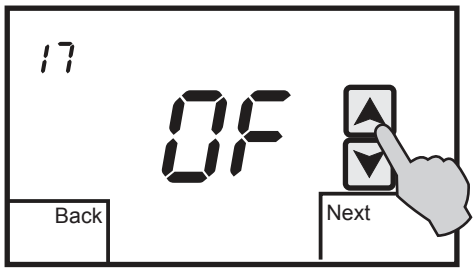

Adjustable from OFF, -18° to 50°C
Remote outdoor sensor must be used

INSTALLER SET-UP MENU

SELECTING TEMPERATURE DISPLAY FORMAT

Menu 18 allows you to select either degree F (Fahrenheit) or degree C (Celsius) display.

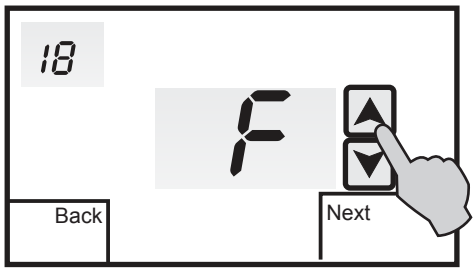

F = Fahrenheit (Factory Default)
C = Celsius

INSTALLER SET-UP MENU

SELECTING EMERGENCY HEATING FUNCTION

Menu 19 enables or disables the emergency heating function. If enabled the W1 relay can be manually selected for heating, locking out the heat pump.

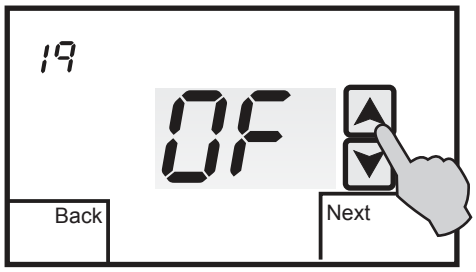

0 = E.HEAT function disabled
1 = E.HEAT function enabled

REMOTE SENSOR INSTALLATION

REMOTE SENSOR TYPES

The SMART 1000 can accommodate both an indoor and outdoor remote sensor. For indoor applications, the SMART-R-02 remote sensor can be wired to the thermostat **SC** and **S1** terminals. Each sensor contains two thermistors wired in series with a switch to select one or both sensors. This reduces the total number of sensors required for series/parallel temperature averaging. Whenever an indoor remote sensor is used, the thermostats internal sensor is automatically disabled. The SMART-R-03 outdoor remote sensor is wired to the **SC** and **S2** terminals. The outdoor sensor thermistor is encapsulated and is ideally suited for ambient conditions ranging from -30 to 140°C and humidity levels of 5 to 95% RH (non-condensing).

SMART-R-02 INDOOR SENSOR INSTALLATION

Locate the sensor in the same manner as the thermostat. Mount the sensor away from any outside wall. Do not install the sensor behind doors, in corners or other dead air spaces. Keep the sensor away from direct air flow, supply registers or near sources of heat such as lamps and appliances. The maximum wire length from the sensor to the thermostat is 164 feet (50 meters).

REMOTE SENSOR INSTALLATION

Use a separate 18-2 shielded cable for sensor wiring. Prior to wiring the sensor to the thermostat, use an ohm-meter or multi-meter to measure the resistance of the sensor. Measure at the end of the wires that will connect to the thermostat. Confirm the resistance value (within 5%) to the temperature where the sensor is mounted. Refer to the Temperature/Resistance Chart on page 43 of this manual. Use a high quality, digital electronic thermometer to read the temperature at the sensor. Remove the sensor cover and place the thermometer probe next to the thermistor to verify an accurate reading. Disconnect power to the thermostat when wiring the sensor to the proper sensor terminals. Strip only as much insulation off of the wires as necessary to provide a good contact with the terminals. The sensor is not polarity specific so either sensor lead may be connected to either designated terminal on the thermostat.

SMART 1000 OTS OUTDOOR SENSOR INSTALLATION

When the SMART-R-02 is wired to the SMART 1000, it will display the outside air temperature as well as control high and low balance points for heat pump and fossil fuel system.

REMOTE SENSOR INSTALLATION

TEMPERATURE/RESISTANCE CHART

Temperature F° (°C)	Resistance (KΩ)	Temperature F° (°C)	Resistance (KΩ)
34°F (1°C)	34.6	70°F (21°C)	11.9
40°F (4.4°C)	26.1	81°F (27°C)	9.4
50°F (10°C)	19.9	90°F (32°C)	7.4
61°F (16°C)	15.3	100°F (38°C)	5.9

NTC type 2 sensor - 10KΩ @ 77°F (25°C)

DISPLAY FUNCTIONS

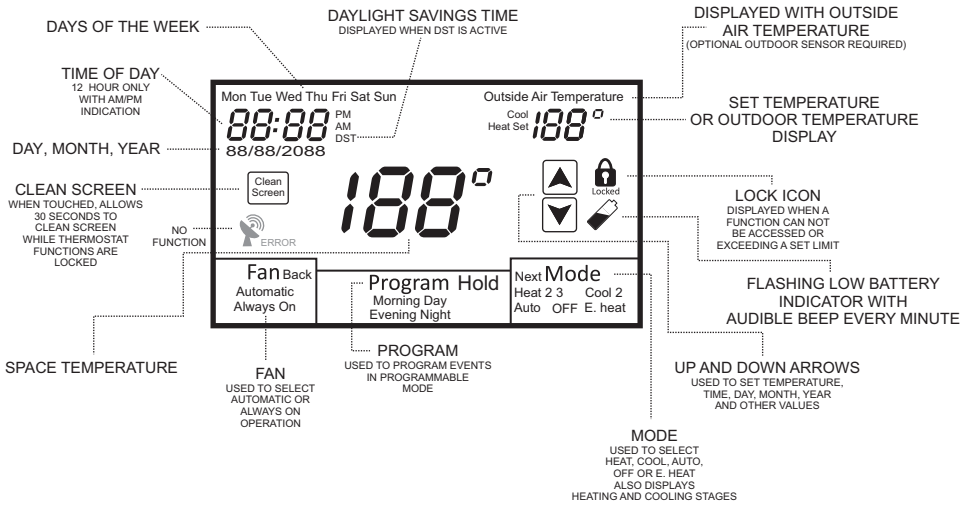

TESTING

FAN OPERATION

Touch **MODE** until the word **OFF** is displayed. Touch FAN until the words **Always On** appear. After a brief moment, the internal fan relay 'G' will energize and the system fan should operate. Touch **FAN** again until the word **Automatic** appears. After a brief moment, the internal fan relay will de-energize and the system fan will shut off.

CONVENTIONAL HEATING

Touch **MODE** until the word **Heat** appears. Touch the **UP** arrow and raise the setpoint above the space temperature and the first stage differential. After a brief moment, the internal heating relay 'W1' will energize and the heating system should operate. The word **Heat** will flash continuously. If the thermostat has been configured for two stage heating, raise the setpoint above the second stage differential and **Heat 2** will flash indicating the 'W2' heating relay is energized. Touch **MODE** until the word **OFF** is displayed.

CONVENTIONAL COOLING

Touch **MODE** until **Cool** appears. Touch the **DOWN** arrow and lower the setpoint below the space temperature and the first stage differential.

TESTING

Note: On a call for cooling, the thermostat activates a 3 minute time delay before the cooling relay ‘Y1’ is energized. After the time delay, the internal fan ‘G’ and cooling relay ‘Y1’ will energize. The word **Cool** will flash. If the thermostat has been configured for two stage cooling, lower the setpoint below the second stage differential and **Cool 2** will flash indicating the ‘Y2’ cooling relay is energized. Touch **MODE** until the word **OFF** is displayed.

CONVENTIONAL HEAT PUMP

When the SMART 1000 is configured for conventional heat pump operation, testing is the same as a heating and cooling system with the exception that a 3 minute time delay is activated before the ‘Y1’ compressor relay will energize on a call for heating or cooling. The fan ‘G’ relay is always energized with a call for compressor, auxiliary or emergency heat. Depending on the mode of operation and equipment configuration, **Heat** or **Cool** will flash when the ‘Y1’ compressor relay is energized. **Heat 2** or **Cool 2** will flash when the ‘Y2’ compressor relay is energized. **Heat 3** will flash when the auxiliary ‘W1’ relay is energized. **E.Heat** will flash when the mode is set to emergency heat. After testing, touch **MODE** until the word **OFF** is displayed.

TESTING

FOSSIL FUEL

When the SMART 1000 is configured for fossil fuel operation, testing is the same as a heating and cooling system with the exception that a 3 minute time delay is activated before the 'Y1' compressor relay will energize on a call for heating or cooling. The fan 'G' relay is always energized with a call for compressor, auxiliary or emergency heat. Depending on the mode of operation and equipment configuration, **Heat** or **Cool** will flash when the 'Y1' compressor relay is energized. **Heat 2** or **Cool 2** will flash when the 'Y2' compressor relay is energized. **Heat 3** will flash when the auxiliary 'W1' relay is energized. **E.Heat** will flash when the mode is set to emergency heat. Whenever the thermostat calls for auxiliary heat, the heat pump compressor or compressors will be de-energized and the auxiliary heat will remain on until the call is satisfied.

LOW BALANCE POINT (Heat Pump or Fossil Fuel)

When an outdoor sensor is used with the SMART 1000 Installer Option 16 allows you to select a low balance point temperature. When the outdoor temperature falls below the low balance point setting, a call for heat from the thermostat automatically energizes the 'W1' relay and bypasses the 'Y1' compressor relay.

TESTING

To test the low balance point setting, set Option 16 above the displayed outdoor temperature and force a call for heating. Only the auxiliary heat relay ‘W1’ should energize. After testing, reset the low balance point setting to a normal operating range.

HIGH BALANCE POINT (Heat Pump or Fossil Fuel)
High balance point is designed to prevent the auxiliary heat ‘W1’ relay from energizing when the outdoor temperature is above the balance point setting. To test the high balance point setting, set Option 17 below the displayed outdoor temperature and force a call for auxiliary heat. Only the compressor ‘Y1’ and/or ‘Y1’ and ‘Y2’ should energize. If the thermostat is placed in the **E.Heat** (emergency heat) mode, the ‘W1’ relay will energize. After testing, reset the high balance point setting to a normal operating range.

ADAPTIVE RECOVERY
Adaptive Recovery is only available in programmable mode (Installer Option 01 = 7) The Adaptive Recovery function of the SMART 1000 permits the user to program a time that a desired set temperature is required. The thermostat then calculates the most energy efficient time to bring on the equipment to reach the setpoint at

the designated time. This calculation involves a complex control algorithm that compares the space temperature deviation from setpoint and rate of recovery history.

PROGRAMMABLE FAN

Programmable Fan (Installer Option 04 = 0) is used to program the fan operation along with the thermostat schedule. This is a very convenient feature that allows selecting continuous (Always ON) or Automatic fan operation for each scheduled event. When Programmable Fan is used, the fan operation can still be overridden at the thermostat and will remain in the override mode until the next scheduled event.

AUXILIARY CONTACTS

The Auxiliary Contacts (Installer Option 05) provide a selectable normally open or normally closed dry contact output that works in conjunction with the Programmable Fan feature when the thermostat is configured for programmable mode. When the fan is in continuous (Always ON) mode, the auxiliary relay coil is energized and de-energizes in Automatic mode. This feature can be used to control peripheral devices such as an economizer or outside air damper.

BASIC TROUBLESHOOTING

SYMPTOM	POSSIBLE FAULT AND REMEDY
No LCD display	If the thermostat is battery powered only, remove the battery compartment and check to see that the positive (+) and negative (-) ends of each battery are oriented properly. Also make sure that the thermostat is securely attached to the subbase with no exposed gaps.
Thermostat can not be set for auto changeover	Installer Option 03 needs to be set to 0 to provide Heat/Auto/Cool/Off operation or Heat/Auto/Cool/Emergency Heat/Off for heat pumps. 03 = 1 Manual Changeover (Heat/Cool/Off) 03 = 2 Heat Only (Heat/Off) 03 = 3 Cool Only (Cool/Off)
Temperature display inaccurate	Air from wall cavity may be leaking into the rear of the thermostat. Seal hole where wiring enters subbase to prevent air infiltration. External influence from appliances, lighting or drafts may be affecting temperature accuracy. Move lamps or other sources of heat away from thermostat.
Thermostat not displaying outdoor temperature	Check wiring at outdoor sensor and sensor terminals on subbase. Outdoor sensor wires to terminals S2 and SC.

BASIC TROUBLESHOOTING

SYMPTOM	POSSIBLE FAULT AND REMEDY
Heat or Cool is flashing	This is not a fault but indicates that the thermostat heating or cooling relay is energized. Depending upon the equipment configuration, Heat 2 or Cool 2 will also be displayed if a second stage is energized. Heat 3 is also displayed for heat pumps having three heating stages.
Lock icon is displayed when trying to set a higher or lower temperature	This is not a fault. The thermostat heating and cooling limits are preventing setting a temperature above or below the limit values. These values can be changes in the Installer Menu. 07 = Cooling Limit. Factory default is 50° F. Adjustable from 43° F to 122° F. 08 = Heating Limit. Factory default is 90° F. Adjustable from 41° F to 120° F.
The fan continues to run after a heating or cooling call is satisfied	The thermostat fan mode may be set to Always On. Touch the fan icon and change it to Automatic. When the SMART 1000 is configured as a programmable thermostat, the fan operation can be programmed for Automatic or Always On with each event. If the Programmable Fan feature is not required, set Option 04 = 1.
Some functions cannot be changed and a padlock icon is displayed	Lock values have been set. Refer to Installer Option menu 06. To remove all lock values, set 06 = 0.

SPECIFICATIONS

Input Voltage (Hardwired)	20-30V AC 50/60 Hz
Relay Rating	24V AC @ 1 Amp maximum per relay
Battery Power	(2) AA 1.5 V
Operating Temperature	0°F to 149°F (0°C to 65°C)
Operating Relative Humidity	0-95% RH (non-condensing)
Storage Temperature	0°F to 149°F (0°C to 65°C)
Overall Size	140W x 95 H x 35mm D
LCD Display Size	105 W x 60mm H
Backlight	Blue LED
Short-cycle Delay	4 minutes
Displayed Temperature Resolution	33.8°F (1°C)
Setpoint Range	
Heating	41°F to 120°F (5°C - 49°C)
Cooling	43°F to 122°F (6°C - 50°C)
Heating and Cooling Limits	Fully adjustable
Onboard and Remote Sensors	NTC type 2
Resistance	10KΩ @ 77°F (25°C)
Tolerance	+ / - 3% @ 77°F (25°C)
Warranty	5 years

FIVE YEAR LIMITED WARRANTY

Robertshaw warrants to the original contract installer, or to the original consumer user, that each new thermostat will be free of defects in materials and workmanship under normal use and service for a period of five (5) years from the date of purchase (the "Warranty Period"). If any Product fails within the applicable Warranty Period, Robertshaw shall, at its option, repair or replace the Product or credit the purchase price, provided the Product is returned to Robertshaw's facility or designated agent with transportation charges prepaid, and the Product, upon examination by Robertshaw, is found not to conform to the Warranty. Cost of Product removal, labor, or reinstallation of new Product are not covered under this Warranty and are not the responsibility of Robertshaw. Warranty on Products, parts, components and/or software sold, but not manufactured by Robertshaw, shall be expressly limited to the warranty terms of the manufacturer of such products, components, parts and/or software.

This above warranty does not apply to: (i) batteries; (ii) any losses or damages due to misuse, use of the Products in other than their normal and customer manner, accident, abuse, water, fire, neglect, normal wear and tear, negligence (other than Robertshaw's), unauthorized modification or alteration, use beyond rated capacity, unsuitable power sources or environmental conditions, stripped threads, improper installation, repair, handling, maintenance or application or any other cause not the fault of Robertshaw.

THE FOREGOING WARRANTY IS IN LIEU OF AND EXCLUDES ALL OTHER WARRANTIES, WHETHER EXPRESS OR IMPLIED, INCLUDING THE IMPLIED WARRANTIES OF MERCHANTABILITY, TITLE AND FITNESS FOR A PARTICULAR PURPOSE. IN NO EVENT SHALL ROBERTSHAW BE LIABLE TO CONSUMER, CONTRACTOR, OR ANY THIRD PARTY FOR ANY SPECIAL, INDIRECT, INCIDENTAL, CONSEQUENTIAL OR PUNITIVE DAMAGES INCLUDING, WITHOUT LIMITATION, LOSS OF USE, LOSS OF PRODUCTION, LOSS OF GOODWILL, LOSS OF CONTRACTS, LOSS OF ANTICIPATED SAVINGS, LOST REVENUES OR PROFITS, OR PROPERTY DAMAGE, REGARDLESS OF WHETHER SUCH LOSS OR DAMAGE IS BASED IN CONTRACT, WARRANTY, TORT, NEGLIGENCE, STRICT LIABILITY, INDEMNITY, PRODUCT LIABILITY, OR OTHERWISE, AND EVEN IF ROBERTSHAW HAS BEEN ADVISED OF THE POSSIBILITY OF SUCH DAMAGES.

REPAIR, REPLACEMENT OR CREDIT OF THE PURCHASE PRICE SHALL CONSTITUTE THE SOLE REMEDIES WITH RESPECT TO DEFECTS IN THE PRODUCTS. THE CONSUMER ASSUMES ALL RISKS AND LIABILITY FOR INCIDENTAL AND CONSEQUENTIAL DAMAGE RESULTING FROM INSTALLATION AND USE OF THE THERMOSTAT.

Some states does not allow the exclusion or limitation of incidental or consequential damages, or allow limitations on how long an implied warranty lasts, so the above limitations or exclusions may not apply to you. This Warranty gives you specific legal rights, and you may also have other rights which vary from state to state.

Return for Warranty Consideration

1. All Products to be considered for warranty must be returned to Company with shipping charges prepaid.
2. Product returned to Company must be packaged in such a manner that will prevent any further damage to the Product during transit. The Warranty terms above shall not apply to any items damaged in transit.
3. An itemized packing slip, including owner's name and address, is required for each shipment to Company of Product(s) to be considered for warranty. The packing slip must contain reason for warranty return, date of installation, date of failure, and a contact name in case further information is required.
4. Within North America (USA and Canada), all cartons must be clearly identified as WARRANTY PRODUCT and returned to:
   USA Distributors: Warranty Department Robertshaw 1921 Anei Circle, Brownsville, TX 78521 USA
   Canada Distributors: Warranty Department Robertshaw 4060 Ridgeway Drive, Unit 14 Mississauga, ON L5L5X9 CANADA

SMART sense®
by Uni-Line®

Robertshaw®, Uni-Line® and SmartSense® are trademarks of Robertshaw, its subsidiaries and/or affiliated companies. All other br ands mentioned may be the trademarks of their respective owners.

Customer Service Telephone 1.800.304.6563
Customer Service Facsimile 1.800.426.0804
HVACCustomerService@robertshaw.com

For Technical Service
Telephone 1.800.445.8299
TechnicalService@robertshaw.com

www.uni-line.com
www.robertshaw.com
©2015 Robertshaw
12/15 – 352-00242-001