NORITZ

Model NCC199(GQ-C3257WZ US) Series
Commercial Condensing Water Heater
Specification Sheet

Job Name _____
Location _____
Architect/Engineer _____
Wholesaler _____
Contractor _____
Model No. _____
Gas Type _____
No. of Units _____ Total BTU/hr Input _____
Flow Rate (GPH) _____
Notes

- **Standard Input** - gas consumption ranges from 16,000 BTUh to 199,900 BTUh
- **Compact Design** - ANSI Z21.10.3/CSA 4.3 certified design that can be wall-mounted indoors with a -DV model or installed outdoors with an -OD model
- **Durable Stainless Steel Casing**
- **Heat Exchanger** - manufactured with commercial grade copper, 25% thicker piping than standard models
- **Venting Options** - available in Outdoor (-OD) or Direct Vent (-DV) model that can use either Schedule 40 PVC/CPVC
- **Direct Electronic Ignition**
- **Multi-System Capability** - units can be linked together by using either the optional 2-unit Quick Connect or multi-unit System Controller for up to 24 units.
- **Thermal Efficiency** - fully condensing, 94%(DV) & 95% (OD) efficient for use with natural gas and propane
- **Temperature Controls** - includes remote thermostat that can precisely adjust the output temperature from 100°F to 185°F
- **Safety Devices** - Flame Sensor, Overheat Prevention Device, Lightning Protection Device, Freeze Protection, Neutralizer Overfill
- **Five Year Limited Heat Exchanger Warranty for Commercial Use**
- **Five Year Limited Parts Warranty & 1-Year Reasonable Labor**
- **Approvals** - CSA, UPC, NSF, Low NOx Approved by SCAQMD [<14ng/J or 20ppm] This product complies with California AB 1953 Low Lead Law and section 1417(d) of the Safe Drinking Water Act



OD Model



DV Model

Model

NCC199 _____

- ☐ *OD (Outdoor Vent)*
- ☐ *DV (Direct Vent)*

Accessories

- ☐ *Horizontal Hood Termination (#PVT-HL)*
- ☐ *3" PVC Termination (#VK3-H-PVC)*
- ☐ *Birdscreen for 3" PVC/CPVC (#VT3-PVCS)*
- ☐ *Birdscreen for 4" PVC/CPVC (#VT4-PVCS)*
- ☐ *Condensate Neutralizer (#NC-1)*
- ☐ *Isolation Valves (#IK-WV-200-1-(SW / TH-LF)*
- ☐ *Pipe Cover (#PC-3S-SUS)*
- ☐ *Quick Connect Cord (#QC-2)*
- ☐ *SV Conversion Kit (#SV-CK-3)*
- *System Controller*
  - ☐ *6-unit (#SC-301-6M)*
  - ☐ *12-unit (#SCU-301-12M)*
  - ☐ *24-unit (#SCU-301-24M)*

NORITZ AMERICA CORPORATION
11160 Grace Avenue, Fountain Valley, CA 92708 Tel. 1-866-7NORITZ www.noritz.com

Dimensions

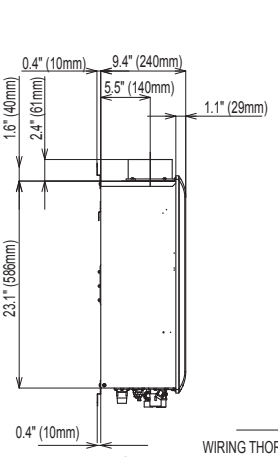

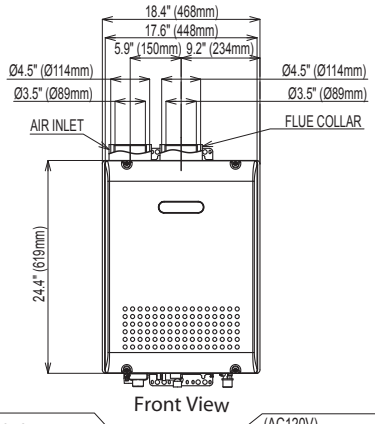

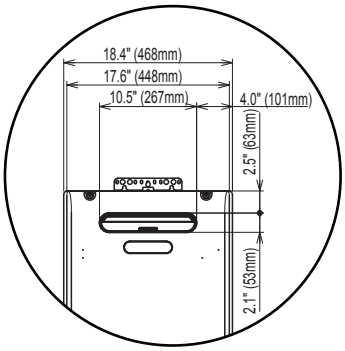

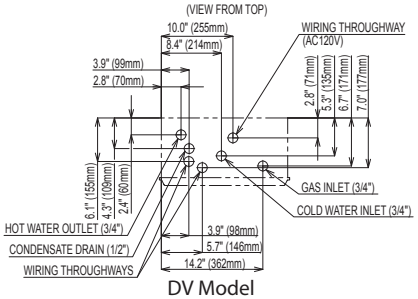

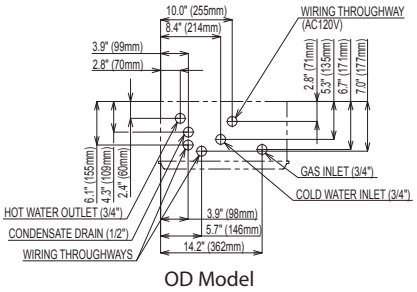

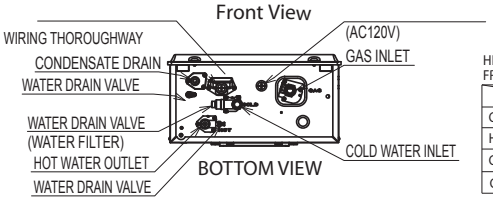

HEIGHT OF EACH FITTING FROM BOTTOM OF CASE

< inch (mm)>

	NCC199OD	NCC199DV
CONDENSATE DRAIN	0.8" (20 mm)	0.8" (20 mm)
HOT WATER OUTLET	1.7" (44 mm)	1.7" (44 mm)
COLD WATER INLET	2.2" (55 mm)	2.2" (55 mm)
GAS INLET	2.2" (56 mm)	2.2" (56 mm)

Flow Rates

Temperature Rise (°F)	30	40	45	50	60	70	80	90	100	110	120	130	140
Flow Rate (GPM)	11.1	9.3	8.4	7.4	6.2	5.3	4.6	4.1	3.7	3.4	3.1	2.9	2.7

Pressure Loss

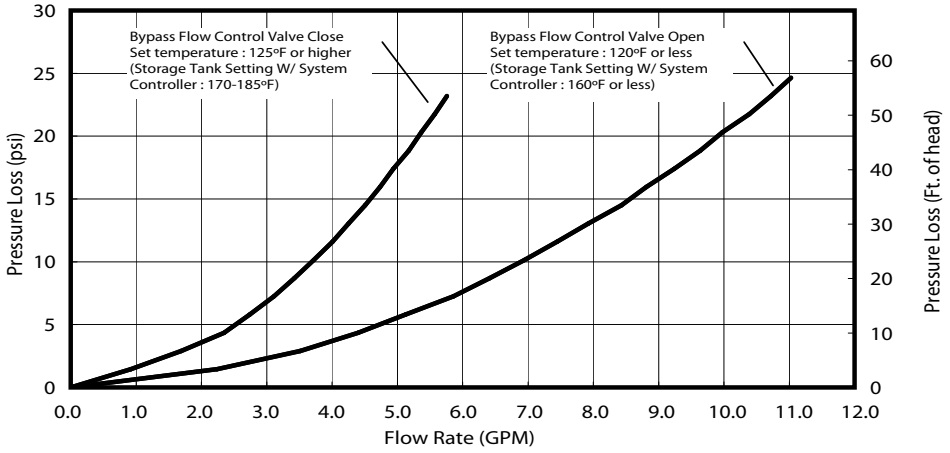

Specifications

Model Name			NCC199OD (GQ-C3257WZ US)	NCC199DV (GQ-C3257WZ-FF US)
Weight			66 (pounds)	68 (pounds)
Operating Pressure			15 - 150 psi	
Gas Supply Pressure			NG: 4.0" - 10.5" LP: 8.0" - 14.0"	
Water Holding Capacity			0.5 Gallon (2 L)	
Connection Sizes	Water Inlet		3/4"	
	Hot Water Outlet		3/4"	
	Gas Inlet		3/4"	
	Condensate Drain		1/2" Threaded	
Power	Supply		120VAC (60Hz), less than 4 amperes	
	Consumption		NG: 78W LP: 80W Freeze Prevention 223W	NG: 81W LP: 83W Freeze Prevention 223W
Freeze Protection			Outdoor: -4℉	Indoor: -30℉
Temperature Settings		℉ Mode	100-150℉ (In 5℉ intervals), 160, 170, 185℉ (14 Options)	
		℃ Mode	37-48℃ (In 1℃ intervals), 50-85℃ (In 5℃ intervals) (20 Options)	
Default Temperature Options		℉ Mode	120, 130, 140, 185℉ (Default is 120℉)	
		℃ Mode	50, 54, 60, 85℃ (Default is 50℃)	

Noritz America reserves the right to discontinue, or change at any time, the designs and/or specifications of its products without notice.

Rev. 06/16